Phillips 66

San Francisco Refinery

Rodeo, California

BAAQMD Plant 16

Flare

Minimization

Plan (FMP)

Non-Confidential *version*

Bay Area Air Quality Management District (BAAQMD), Regulation 12, Rule 12

Environmental Protection Agency (EPA), 40 CFR 63 Subpart CC

October 2019, Revision 18

Contents

1.0 Flare Minimization Plan 1-4

1.1 Safety Statement 1-4

1.2 Executive Summary 1-4

1.3 Certification 1-7

1.4 Revisions to the Flare Management Plan 1-7

2.0 Flare System Information 2-1

2.1 Background Information for Flare Systems 2-1

2.2 Technical Data – Description of Flaring Systems (401.1) 2-3

2.2.1 Phillips 66, San Francisco Refinery Flare & Fuel Gas Recovery System Overview 2-3

2.2.2 Detailed process flow diagram, PFD (401.1.1) 2-3

2.2.3 Description of Monitoring and Control Equipment (401.1.2) 2-1

2.2.4 Flare Monitoring Instrumentation Description 2-14

2.2.5 Pressure Relief Devices (PRDs) to Flares 2-19

3.0 Reductions & Planned Reductions 3-20

3.1 Reductions Previously Realized (401.2) 3-20

3.2 Planned Reductions (401.3) 3-27

4.0 Prevention Measures (401.4) 4-1

4.1 “Major” Maintenance Activities (401.4.1) 4-1

4.1.1 Refinery Maintenance and Turnaround Activities 4-1

4.1.2 Measures to Minimize Flaring During Preplanned Maintenance 4-8

4.1.3 Turnaround and Maintenance Flare Minimization Planning Tool 4-14

4.1.4 Measures to Minimize Flaring During Unplanned Maintenance 4-14

4.2 Gas Quality/Quantity Issues for Each Flare (401.4.2) 4-15

4.2.1 When Flaring is Likely to Occur 4-15

4.2.2 Vent Gas Recovery Systems 4-19

4.3 Recurrent failure (401.4.3) 4-24

4.3.1 Reportable Flaring Events Attributable to the Same Process or Equipment Item 4-24

4.3.2 Means to Prevent Recurrent Failure 4-24

5.0 Other Information Requested by APCO to Assure Compliance (401.5) 5-1

5.1 New Equipment Installations (404.2) 5-1

6.0 Root Cause Analysis and Corrective Action Requirements for Flares 6-1

6.1 BAAQMD Reportable Flaring Event Determination & Reporting of Cause 6-1

6.2 Root Cause Analysis and Corrective Action Requirements for Flares under MACT CC 6-1

Attachments

Attachment A	San Francisco Refinery Simplified Flare System Overview
Attachment B	San Francisco Refinery Detailed Flare Gas System Description
Attachment C	San Francisco Refinery Flare System Process Flow Diagram
Attachment D	Cross Reference Table 40 CFR 63 Subpart CC RSR Flare Plan Elements
Attachment E	San Francisco Refinery Unit List
Attachment F	Flare Minimization Process Flowchart
Attachment G	Typical Flare Gas Recovery System
Attachment H	Flaring Event Overview, Recurring Failure Review, and Categorization
Attachment I	Storage, Treatment, & Recovery Schematic
Attachment J	Pressure Relief Devices which can vent to the Flare
Attachment K	Flare Construction
Attachment L	Compressor Capacity & Monitoring Description ***BUSINESS CONFIDENTIAL portion***
Attachment M	Fuel Gas System Description ***BUSINESS CONFIDENTIAL portion***
Attachment N	Cost Effectiveness Calculation Background Material
Attachment O	Document Revision Log

1.0 Flare Minimization Plan

Regulation 12, Rule 12, was adopted by the BAAQMD in July, 2005, with the objective of reducing emissions from flares at petroleum refineries. This flare minimization plan for the Phillips 66, San Francisco Refinery (SFR) located in Rodeo, CA is consistent with progress toward that goal. It defines a series of measures that will lead to minimization of flaring without compromising refinery operations and practices with regard to safety. The key tools utilized are careful planning to minimize flaring, measuring and monitoring of flare events when they occur, coupled with evaluation of the cause of flaring events that do occur. Using this approach, an understanding of the events leading to the flaring event can then be incorporated into future planning and flare minimization efforts. The plan also examines the costs and benefits of potential equipment modifications to further increase flare gas recovery.

1.1 Safety Statement

This Flare Minimization plan outlines the approach that Phillips 66, San Francisco Refinery has developed to manage and minimize flaring events, without compromising the critical safety function of the flare system. Flares are first and foremost devices to ensure the safety of refinery operations and personnel. Nothing in the BAAQMD 12-12 rule or in this Flare Minimization Plan (FMP) should be construed to compromise refinery operations and practices with regards to safety.

1.2 Executive Summary

Shown below are graphical representations of historical flare flow and emissions from the period of 2011 to June 30, 2019:

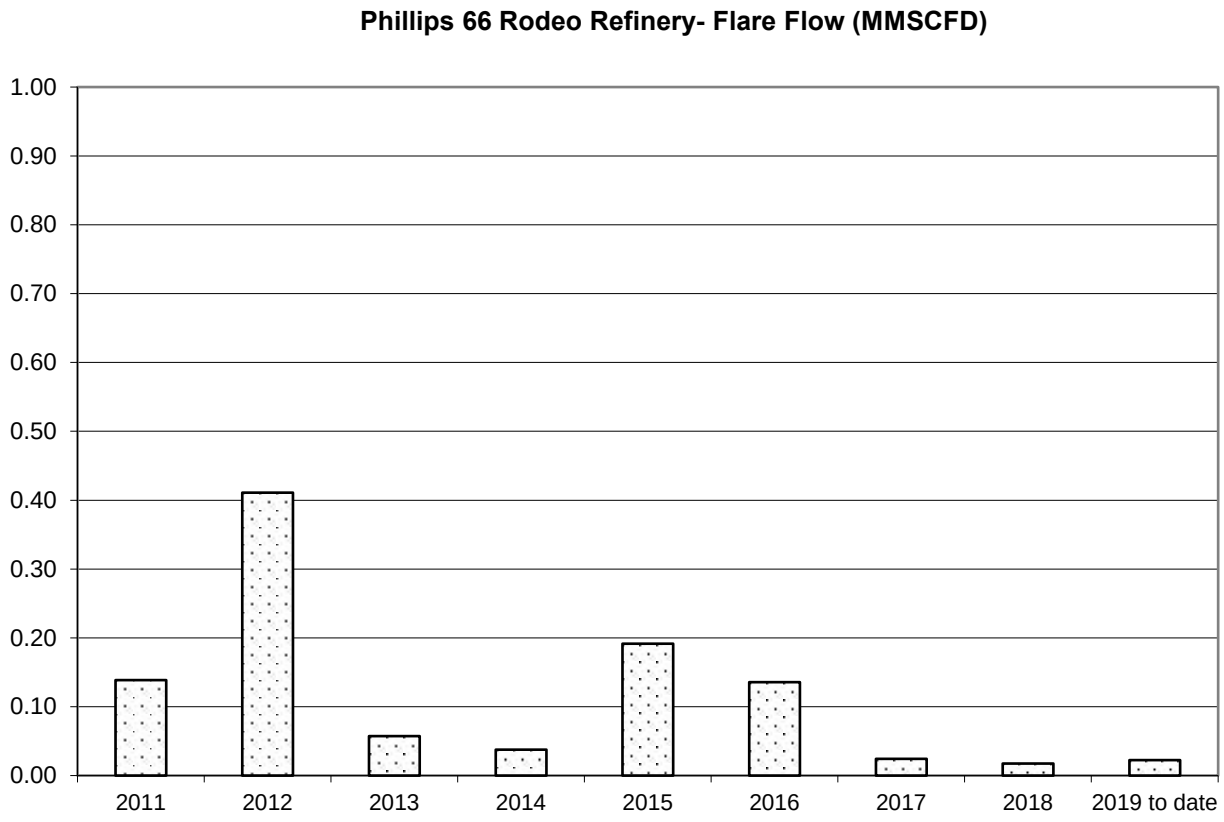

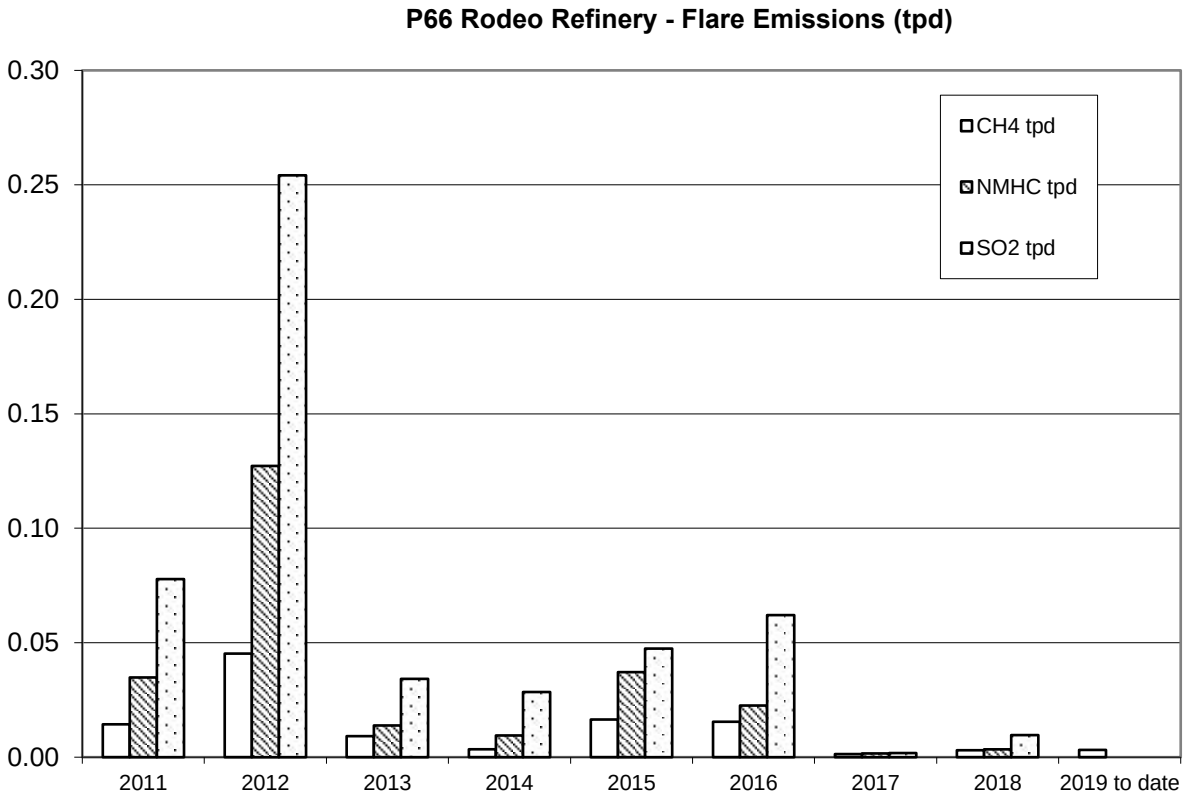

The Rodeo Refinery installed and has utilized a Flare Gas Recovery Compressor since the mid-70's. Historic practices emphasized flare minimization. Some of the recent flaring reductions have occurred due to improved monitoring and tracking of flare volumes as well as attributing causes to all flaring as required by BAAQMD 12-11 and 12-12 and internal policies for incident investigation. Other efforts to minimize flare emissions have occurred through communication and improved awareness.

Higher flare volumes in 2012 and 2016 were due to significant turnaround activities taking place. Key pressure vessels in the flare gas recovery system were removed from service for required 10-year vessel metallurgical inspections in 2016. Although similar turnaround activities took place in 2012 and 2016, a significant reduction in flare volume, duration and SO_2 emissions were achieved in 2016 relative to 2012. In 2012 there was a large turnaround which contributed to higher than usual year to date flows. Following the turnaround, a relief valve leaking to the flare was discovered. An engineered solution was developed in order to isolate and provide an alternative relief path. In 2012 there were also a number of periods of fuel gas imbalance in which scrubbed fuel gas was sent to the flare.

In the second half of 2010 the facility experienced a number of flaring events due to the unplanned shutdowns of the 3rd party Hydrogen supplier. Phillips 66 worked closely with the 3rd party Hydrogen supplier to improve reliability at their facility. Work began in 2010 and continued up until mid-2011 when the supplier made significant equipment reliability upgrades during a planned shutdown.

In August 2009 three new, redundant liquid ring Flare Gas Recovery Compressors were installed and put in service. The purpose of the new compressors is to provide additional capacity on a consistent basis and to provide for backup compressor capacity. The new compressors are of a different design than the existing compressor and are designed to handle a wider range of composition and of flare gas. They are also less susceptible to liquid carryover impacts.

Based on a review of small flaring events, the addition of the new Flare Gas Recovery Compressors has reduced the number and volume of brief peak exceedances that previously occurred. This trend was observed since 2009. More importantly, the new compressors were operated on a regular basis while the older compressor was shutdown for major planned maintenance activities. In the past this type of maintenance activity would have resulted in consecutive days of flaring. In these cases the new compressors picked up the flare gas recovery load for a number of days and were effective in reducing flaring volumes.

Another improvement which has occurred is due to improved planning prior to the occurrence of flare activity. Flaring typically occurs during turnarounds when either the gas quality or quantity is not recoverable by the Fuel Gas Recovery Compressor or System. Turnaround planning is conducted to review the periods when flaring may occur. Prior to the turnaround activity, a team discusses these periods in order to determine methods to minimize flaring. In addition, in 2012 a process of further addressing impacted plant systems (e.g. fuel gas, steam, flaring, etc.) was formalized. This high level overview helps to early identify systems which can be optimized prior to a turnaround and in some cases can further reduces flaring.

In early 2011 the manner in which Unit 110 Hydrogen Plant shutdown and startups was changed. This resulted in a significant reduction in the period of flaring which occurs during each of these activities. During 2012 there were a number of periods of flaring associated with Unit 110. Work continued in 2012 and 2013 to further improve procedures to minimize flaring associated with Unit 110 startups and shutdowns. Additionally, although not apparent from the flare trends, there are a number of unit shutdowns that occur each year in which little or no flaring occurs. This is due to past implemented and current practices to reduce flaring.

One of the focus items for flare reduction is fuel gas imbalance. In December 2011 a permit application was submitted to revise permit limits at the Steam Power Plant (SPP). This would allow more refinery fuel gas to be sent to SPP during periods of fuel gas imbalance which typically occur while large turnarounds are taking place. Combustion of purchased natural gas, would be reduced while reducing or eliminating flaring. BAAQMD Permitting is continuing to review this permit application.

Another significant potential project is the Phillips 66 Propane Recovery Project. The purpose of the project is to recover propane and butane from the refinery fuel gas (RFG). Another aspect of the project is to remove a portion of the sulfur compounds from the remaining Refinery Fuel Gas (RFG). From a flaring standpoint, this project is beneficial in reducing overall volume of Refinery Fuel Gas. The propane and butane will be replaced by natural gas provided by PG&E. Because it is relatively easy to reduce the amount of natural gas being imported, the likelihood of flaring due to fuel gas imbalance will be reduced. In addition, by reducing the concentration of sulfur in fuel gas this removes some of the restrictions on where fuel gas can be routed which further helps to minimize and reduce periods of potential fuel gas imbalance. Currently, the Land use Permit is being appealed.

The Rodeo Refinery went 11 months, from July 2013 until June 2014 without a Reportable Flaring Event. Recently the facility went from July 2017 through August 2018 without a Reportable Flaring Event. This milestone is due to a combination of improved reliability, on-going focus on flare minimization operating enhancements to prevent flaring and light turnaround activity.

1.3 Certification

I certify that, based on the information available to me, the flare minimization plan is accurate, true, and complete.

Kevin Schmitt – Operations Manager

1.4 Revisions to the Flare Management Plan

Pursuant to BAAQMD 12-12-404 the Flare Minimization Plan is required to be updated, as appropriate, and submitted annually for review and approval by BAAQMD. The facility must revise and submit the FMP prior to the installation or modification of the equipment referenced in 401.1.1.

Pursuant to 40 CFR 63.670(o)(2)(ii), the facility would also be required to update this plan periodically to account for changes in the operation of a flare, such as;

- installation of a flare gas recovery system (update only), or
- change in the design of the smokeless capacity (requires re-submittal)

2.0 Flare System Information

2.1 Background Information for Flare Systems

Refineries process crude oil by separating it into a range of components, or fractions, and then rearranging those components to better match the yield of each fraction with market demand. Petroleum fractions include heavy oils and residual materials used to make asphalt or petroleum coke, mid range materials such as diesel (heating oil), jet fuel and gasoline, and lighter products such as butane, propane, and fuel gases.

The San Francisco Refinery is organized into groups of process units, with the general goal of maximizing the production of transportation fuels. Each unit takes in a set of feed streams and produces a set of product streams with the composition changed (or upgraded) as one step toward production of an optimal mix of refined products. Many of these processes operate at elevated temperatures and pressures, and a critical element of safe design is having the capability of releasing excess pressure via relieving devices to the flare header to manage excess materials in a controlled manner. These separation and rearrangement processes also produce and/or consume materials that are gases at atmospheric pressure. As a final step in processing, many units provide treatment to conform to environmental specifications such as reduced sulfur levels.

The refinery is designed and operated so that there will be a balance between the rates of gas production and consumption. Under normal operating conditions, essentially all gases that are produced are routed to the refinery fuel gas system, allowing them to be used for combustion in refinery heaters and boilers. Typical refinery fuel gas systems are configured so that the fuel gas header pressure is maintained by making up natural gas to meet the net fuel requirement. This provides a simple way to keep the system in balance so long as gas needs exceed the volume of gaseous products produced. Additional operational flexibility is typically maintained by having the ability to add butane and having the capability to adjust the rate of fuel gas consumption to a limited extent at the various refinery users (e.g. heaters, boilers, cogeneration units).

A header for collection of vapor streams is included as an essential element of nearly every refinery process unit. These are referred to as “flare headers”, as the ultimate destination for any net excess of gas is a refinery flare. One of the primary functions of the flare header is safety. It provides the process unit with a controlled outlet for any excess vapor flow, making it an essential safety feature of every refinery. The flare header also has connections for equipment depressurization and purging related to maintenance turnaround, startup, and shutdown, as well as pressure relief devices to handle upsets, malfunctions, and emergency releases.

Knockout drums are in place for separation of entrained liquid. This minimizes the possibility of liquid being carried forward to the flare or flare gas compressor. The vapor stream from the unit knockout drum is then routed to the refinery flare gas recovery system.

The refinery flare system consists of a series of branch lines from various unit collection systems which join a main flare header. The main flare header is in turn connected to both a flare gas recovery system and to the flares. Normally all vapor flow to the flare header is recovered by the flare gas recovery compressor, which increases the pressure of the flare gas allowing it to be routed to a gas treater for removal of contaminants such as sulfur and then to the refinery fuel gas system. Gases that cannot be recovered or used by the flare gas recovery compressor, the treater(s), and/or the fuel gas system end users flows to a refinery flare so it can be safely disposed of by combustion.

A flare seal drum is located at the base of each flare to serve several functions. A level of water is maintained in the seal drum to create a barrier which the gas must cross in order to get to the flare stack. The depth of liquid maintained in the seal determines the pressure that the gas must reach in the flare header before it can enter the flare. This creates a positive barrier between the header and the flare, ensuring that so long as the flare gas recovery system can keep pace with net gas production, no gas from the flare header will flow to the flare. It also guarantees a positive pressure at all points along the flare header, eliminating the possibility of air leakage into the system. Finally it provides a positive seal to isolate the flare, which is an ignition source, from the flare gas header and the process units. The flare systems combine two flares with different water seal depths, effectively “staging” operation of the flares.

Gases exit the flare via a flare tip which is designed to promote proper combustion over a range of gas flowrates. Steam is used to improve mixing between air and hydrocarbon vapors at the flare tip, so as to improve the efficiency of combustion and reduce smoking. A continuous flow of gas to each flare is required for two reasons. Natural gas pilot flames are kept burning at all times at the flare tip to ignite any gas flowing to the flare. Additionally, a small purge gas flow is required to prevent air from flowing back into the flare stack.

The sources of normal or base level flow to the refinery flare gas collection system are varied, but in general result from many small sources such as leaking relief valves, instrument purges, and pressure control for refinery equipment items (e.g. overhead systems for distillation columns). Added to this base load are small spikes in flow from routine maintenance operations, such as clearing hydrocarbon from a pump or filter by displacing volatiles to the flare header with nitrogen or steam. Additional flare load results from routine process functions, such as drum depressurization at the delayed coking unit.

Flaring often occurs during unit startups and shutdowns or when pieces of equipment associated with units are taken out of service. Equipment maintenance results in the need for removal of hydrocarbon from process equipment and associated piping before opening, for both safety and environmental reasons including compliance with BAAQMD Regulation 8 Rule 10. Typical decommissioning procedures include multiple steps of depressurization, and purging with nitrogen or steam to the flare header. During these steps, the quality of the fuel gas is degraded and at times cannot be recovered. During startups, low quality gases may also be produced which are not desirable to be recovered. Additionally, when multiple units are shutdown, flaring can occur when gases are being produced at one unit and an interrelated unit which normally utilizes the gases, such as hydrogen, have not yet been started up.

Although maintenance-related flows can be large, the design and sizing of refinery flare systems is without exception driven by the need for safe disposal of much larger quantities of gases during upsets and emergencies. A major emergency event, such as a total power failure, will require the safe disposal of a very large quantity of gas and hydrocarbon materials during a very short period of time in order to prevent a catastrophic increase in system pressure. The flow that the flare system could be called upon to handle during an event of this type is several orders of magnitude greater than the normal or baseline flowrate.

2.2 Technical Data – Description of Flaring Systems (401.1)

This section contains the information required under 401.1 in regards to required Technical Data.

2.2.1 Phillips 66, San Francisco Refinery Flare & Fuel Gas Recovery System Overview

2.2.1.1 General Flare Gas System Overview

The Phillips 66 Rodeo Refinery has a flare gas recovery system in which liquids and gases are recovered the majority of the time, cleaned, and utilized as fuel gas in facility heaters and the co-generation plant. When gases cannot be recovered due to quality or quantity issues gases would be routed to the flare. There are two flares on site which function in a semi-cascading manner. The C-1 Main Flare (S-296) is the primary flare that is utilized. The MP-30 Flare (S-398) is used during significant events (i.e. major utilities failure) and during times in which the Main Flare is shut down for maintenance. The Refinery flare system consists of the following key components:

- Flare gas compressor recovery system;
- Liquid recovery system;
- Video monitoring system;
- Flare gas flow measurement system;
- Automated flare gas sampling system, and
- Smokeless flare installation.

See Attachment A for simplified diagram of the flare gas recovery system. Attachment B contains a detailed description of the refinery flare gas system. Attachments K and L contain information on the flares and compressors, respectively.

2.2.2 Detailed process flow diagram, PFD (401.1.1)

See Attachment C for PFD of SFR Flare System components. The PFD contains the information required under 401.1.1. The PFD contains the pipelines, process unit blowdown origins, flare gas recovery system equipment, water seals, surge drums, knock-out pots, and other equipment associated with the flare system. The drawing contains the dimensions and capacities of the flare gas recovery system, compressor, water seals, surge drums, and knockout pots.

2.2.3 Description of Monitoring and Control Equipment (401.1.2)

Locations of flowmeters, temperature and pressure indicators are shown on the PFDs referenced in the section above. Locations of sample points and monitoring equipment are also shown on the PFDs. Listed below are the monitors and controls associated with the flare gas recovery system as required by 401.1.2.

2.2.3.1 C-1 Main Flare (S-296)

Flare System Flowmeters

Main Flare (S-296) – Flare System Flowmeters				
Tag Number	***Description***	***Location***	***Type (e.g. sonic)***	***Range (X – Y scfd)***
Flare Gas Flow:				
RFLRE:19FI0520	Main Flare 42" Line	42" Line - Upstream of Flare Stack Water Seal (C-1)	Ultrasonic Flowmeter	0 - 60,000
RFLRE:19FI0520l.	42" Line - low range			0 - 2,000
RFLRE:19FI0520h.	42" Line - high range			0 - 60,000
RFLRE:19FI0513A.	Main Flare 42" Line	42" Line - Upstream of Flare Stack Water Seal (C-1)	Anemometer [1]	0 - 110,000
RFLRE:19FI0586	Main Flare 10" Line	10" Line - From U200 & U267	Ultrasonic Flowmeter	0 - 20,000
RFLRE:19FI0586l.	10" Line - low range			0 - 2,000
RFLRE:19FI0586h.	10" Line - high range			0 - 20,000

Main Flare (S-296) – Flare System Flowmeters				
Tag Number	***Description***	***Location***	***Type (e.g. sonic)***	***Range (X – Y scfd)***
RFLRE:19FI0513.	Main Flare 10" Line	10" Line - From U200 & U267	Anemometer [1]	0 - 6000
Purge Gas Flow:				
RFLRE:FI2672	Natural Gas Purge	Purge into Flare Stack (C-1) RSR	Ultrasonic	0 – 150 MSCFH
RFLRE:19FIC0510.	Natural Gas Purge	Purge into Flare Stack (C-1)	Orifice Plate	0 - 930 MSCFD
RFLRE:19FI0521.	Natural Gas Purge	Purge into Flare Stack (C-1)	Orifice Plate	0 - 25 MSCFD
Steam Gas Flow				
RFLRE:FI2673	Steam Meter	Steam to Flare RSR	Ultrasonic	0 – 100 Mlb/hr

[1] Does not meet 12-11 accuracy requirements for all ranges. Utilized as a backup meter, when necessary.

Continuous Recording Instruments

Main Flare (S-296) – Continuous Recording Instruments			
Tag Number	***Description***	***Location***	***Instrument Type***
Pressure			
RFLRE:19PIC0530.	200:19F-1 PRESSURE	Refinery Relief Blowdown Drum (F-1) Pressure	Pressure Indicator
RFLRE:19PI0520.	42" Line - Upstream of Flare Stack Water Seal (C-1) (integrated with ultrasonic flowmeter)	42" Line - Upstream of Flare Stack Water Seal (C-1)	Pressure Indicator
RFLRE:19PI0586.	Main Flare 10" Line (integrated with ultrasonic flowmeter)	10" Line - From U200 & U267	Pressure Indicator
Level			
RFLRE:19LIC0512.	200:19F-3 Water Seal Level	19F-3 Water Seal	Water Seal Level Indicator
RFLRE:19LI0508.	200:19C-1 Flare Stack Water Seal Level	19C-1 Flare Stack	Water Seal Level Indicator
Temperature			
RFLRE:19TI0520.	200:Flare Blowdown Line Temperature	42" Line - Upstream of Flare Stack Water Seal (C-1)	Temperature
RFLRE:19TI0586.	200:10” Line Flare Blowdown Line Temperature	10" Line - From U200 & U267	Temperature

Main Flare (S-296) – Continuous Recording Instruments			
Tag Number	***Description***	***Location***	***Instrument Type***
RFLRE:19TI0528A.	200:19C-1 Flame Sensor	Flare Tip	Thermocouple
RFLRE:19TI0528B.	200:19C-1 Flame Sensor	Flare Tip	Thermocouple
RFLRE:19TI0528C.	200:19C-1 Flame Sensor	Flare Tip	Thermocouple
RFLRE:19TI0528D.	200:19C-1 Flame Sensor	Flare Tip	Thermocouple
Analyzers			
RFLRE:19AI0520.	42" Line - Molecular Weight	42" Line - Upstream of Flare Stack Water Seal (C-1)	MW Indicator
RFLRE:19AI0586.	10” Line – Molecular Weight	10" Line - From U200 & U267	MW Indicator
RFLRE:19AI0501.	42" Line - Oxygen	42" Line - Upstream of Flare Stack Water Seal (C-1)	Oxygen Content Indicator
RFLRE:A2670	Net Heating Value Calorimeter, NHV RSR	42" Line - Upstream of Flare Stack Water Seal (C-1)	Calorimeter
RFLRE:A2671	Hydrogen Composition RSR	42" Line - Upstream of Flare Stack Water Seal (C-1)	H2 Analyzer

2.2.3.2 MP-30 Flare (S-398)

Flare System Flowmeters

MP-30 Flare (S-398) – Flare System Flowmeters				
Tag Number	***Description***	***Location***	***Type (e.g. sonic)***	***Range (X – Y scfm)***
Flare Gas Flow:				
RFLRE:19FI0584.	MP30 48" Line	48" Line - Downstream of Water Seal (F-604)	Ultrasonic Flowmeter	
RFLRE:19FI0584L.	48" Line - low range			0 - 2,000
RFLRE:19FI0584H.	48" Line - high range			0 - 35,070
RFLRE:19FI0585.	36" Line	36" Line - from Refinery Blowdown Line (F-2)	Ultrasonic Flowmeter	
RFLRE:19FI0585L.	36" Line – low range			0 – 2,000
RFLRE:19FI0585H.	36" Line – high range			0 – 120,000
RFLRE:19FI0580.		12” Line - From U200 & U267	Ultrasonic Flowmeter	
RFLRE:19FI0580L.				0 – 2,000
RFLRE:19FI0580H.				0 – 510 MSCFH
Purge Gas Flow				
RFLRE:19FIC0511.	Natural Gas Purge		Orifice Plate	0 - 930 MSCFD

MP-30 Flare (S-398) – Flare System Flowmeters				
Tag Number	***Description***	***Location***	***Type (e.g. sonic)***	***Range (X – Y scfm)***
Steam Flow				
RFLRE:2676	Steam to Flare RSR	Flare Tip	Ultrasonic	0 – 100 Mlb/hr

[1] Does not meet 12-11 accuracy requirements for all ranges. Utilized as a backup meter, when necessary.

Continuous Recording Instruments

MP-30 Flare (S-398) – Continuous Recording Instruments			
Tag Number	***Description***	***Location***	***Instrument Type***
Pressure			
R230:PI6014.	230F-600 Blowdown Drum	Upstream of MP30 Relief Blowdown Drum (F-600)	Pressure Indicator
RFLRE:19PI0584.	MP30 48" Line	48" Line - Downstream of Water Seal (F-604)	Pressure Indicator
Level			
R230:LIC654A.	230:F-604 MP30 Flare System Water Seal Make Up H2O Level	F-604 Vessel	
R230:LIC654B.	230F-604 MP30 Flare System Water Seal H2O Drain Level	F-604 Vessel	

MP-30 Flare (S-398) – Continuous Recording Instruments			
Tag Number	***Description***	***Location***	***Instrument Type***
RFLRE:19LI0509.	200:(C-602) Flare Stack Water Seal	MP30 Flare Stack (C-602) Water Seal	Water Seal Level Indicator
Temperature:			
RFLRE:19TI0584.	200:MP30 Flare Vapor Temperature	48" Line - Downstream of Water Seal (F-604)	Temperature
RFLRE:19TI0529A.	200:(C-602) NW Flare Pilot	Flare Tip	Thermocouple
RFLRE:19TI0529B.	200:(C-602) NE Flare Pilot	Flare Tip	Thermocouple
RFLRE:19TI0529C.	200:(C-602) SE Flare Pilot	Flare Tip	Thermocouple
RFLRE:19TI0529D.	200:(C-602) SW Flare Pilot	Flare Tip	Thermocouple
Analyzers			
RFLRE:19AI0584.	200:MP30 Flare Vapor Molecular Weight	48" Line - Downstream of Water Seal (F-604)	Molecular Weight Indicator
RFLRE:19AI0585.	200:MP30 Flare Vapor Molecular Weight	36" Line - from Refinery Blowdown Line (F-2)	Molecular Weight Indicator
RFLRE:19AI0580.	200:MP30 Flare Vapor Molecular Weight	12” Line - From U200 & U267	Molecular Weight Indicator
RFLRE:19AI0502.	200:MP30 Flare Oxygen	48" Line - Downstream of Water Seal (F-604)	Oxygen Content Indicator
RFLRE:A2674	Net Heating Value Calorimeter,	48" Line - Downstream of Water Seal (F-604)	Calorimeter

MP-30 Flare (S-398) – Continuous Recording Instruments			
Tag Number	***Description***	***Location***	***Instrument Type***
	NHV RSR		
RFLRE:A2675	Hydrogen Composition RSR	48" Line - Downstream of Water Seal (F-604)	H2 Analyzer

Unit 200 Flare Gas Recovery Compressor (G-503)
See Attachment C and L for diagrams showing locations of meters and analyzers.

Flowmeters

Flare Gas Recovery Compressor (G-503) Flowmeters				
Tag Number	***Description***	***Location***	***Type (e.g. sonic)***	***Range (X – Y MMSCFD)***
Gas Flow:				
R200:FI_506B.	Flare Gas Recovery Compressor (G-503)	Downstream of Salt Water Exchanger E-510	Orifice Plate	0 – 4.64

Monitors and Instruments

Note: All setpoints and alarms are subject to change. These values may change as operational or safety optimization opportunities are identified. This list contains the values at the time of publication.

Flare Gas Recovery Compressor (G-503) Monitors and Instruments

Flare Gas Recovery Compressor (G-503) Monitors & Instruments				
Tag Number	***Description***	***Location***	***Att***	***Setpoint or Alarms***
Pressure				
R200:PI0509.	200:F-509 Separator Overhead	F-509 Separator Overhead	C	0.5 psig Alarm 0.0 psig – Action automatic unloading of compressor cylinders
R200:PI0513.	200:G-503 1st Stage	Downstream of 1st Stage	C	None
R200:PI0515.	200:G-503 2nd Stage	Downstream of 2nd Stage	C	None
R200:PI0514.	200:G-503 Frame Oil	Downstream of Frame Oil Filters	L	None
R200 – PAL 575	200: G-503 Frame Oil (Local Indication)	Downstream of Frame Oil Filters	L	Shutdown Compressor - < 16 psig
Temperature				
R200:TI0509.	200:F-509 Separator Overhead	F-509 Separator Overhead	C	Alarm – 150 ^{o}F
R200:TI0511.	200:G-503 Flare Gas Recovery Compressor 1st Stage	Downstream of 1st Stage	C	None
R200:TI0513.	200:G-503 Flare Gas Recovery Compressor 2nd Stage	Downstream of 2nd Stage	C	Alarm – 300 ^{o}F Shutdown - 350 ^{o}F

Flare Gas Recovery Compressor (G-503) Monitors & Instruments				
Tag Number	***Description***	***Location***	***Att***	***Setpoint or Alarms***
R200:TI0510.	200:G-503 Tempered Water	Upstream of Exchanger E-512	L	None
R200:TI0512.	200:G-503 Frame Oil	Downstream of Frame Oil Pump	L	None
Analyzer				
R200:AI0504.	200:G-503 Discharge Specific Gravity (SG)	Compressor Discharge	L	Alarm Low SG – 0.60 Alarm High SG – 1.12
R200 - AE503.	200:G-503 Compressor Discharge Oxygen Analyzer	Compressor Discharge	L	Alarm – 1.5% O_2
Level Indicator				
R200:L 509	200:F-509 Level Indicator (Local Indicator)	F-509 Low Pressure Separator	L	Level is monitored by Operator.
R200 – LAH 510	200:F-509 Level Shutdown (Local Indicator)	F-509 Low Pressure Separator	L	Shutdown Compressor – 30% Level
R200 – LAH 537	200:F-503A Level Shutdown (Local Indicator)	F-503A G-503 First Stage Suction Pulsation Dampener	L	Shutdown Compressor – 75% Level
R200 – LAH 538	200:F-503C Level Shutdown (Local Indicator)	F-503C: G-503 Second Station Suction Pulsation Dampener	L	Shutdown Compressor – 75% Level
R200 – LAH 541	200:F-503E Level Shutdown (Local Indicator)	F-503E: G-503 Second Stage Suction Knock Out Pot	L	Shutdown Compressor – 90% Level

2.2.3.3 Unit 200 Liquid Ring Flare Gas Recovery Compressors (G-540A/B/C)

Note: All data in this section is preliminary and subject to change. These values and meter numbers may change as operational or safety optimization opportunities are identified. The Compressor is undergoing a Process Hazard Analysis (PHA) at the time of the FMP update, which may result in additional changes. At this time all ranges and setpoints are being developed and thus are shown as pending.

See Attachment C and L for diagrams showing locations of meters and analyzers.

Flowmeters

Liquid Ring Flare Gas Recovery Compressor (G-540 A/B/C) Flowmeters				
Tag Number	***Description***	***Location***	***Type*** ***(e.g. sonic)***	***Range*** ***(X – Y MMSCFD)***
Gas Flow:				
FI-1573	Liquid Ring Flare Gas Recovery Compressor (G-540A, B, & C) Flow	Downstream of F-540 Gas Separator Drum	Orifice	0 – 6,000 MSCFD
Service Liquid Flow:				
FI-1544 (A) **FI-1545 (B)** **FI-1546 (C)**	Compressor Service Liquid Flow Indication, Alarm, & Shutdown	To Compressor	Orifice	0-200 gpm <u>Alarms:</u> Low Low 100 (SD) Low 110 gpm High 150 gpm

Monitors and Instruments

Note: All data in this section is preliminary and subject to change. These values may change as operational or safety optimization opportunities are identified. The Compressor is undergoing a Process Hazard Analysis (PHA) at the time of the FMP update, which may result in additional changes.

Liquid Ring Flare Gas Recovery Compressor (G-540 A/B/C) Monitors and Instruments

Liquid Ring Flare Gas Recovery Compressor (G-540 A/B/C) Monitors & Instruments				
Tag Number	***Description***	***Location***	***Att***	***Setpoint or Alarms***
Pressure				
PI-1541	High Pressure Alarm and Shutdown	Flare Gas to Compressor	C	Alarm High 115.3 psig Alarm High High 125.3 psig (SD)
PI-1543	Low & High Suction Pressure Alarm	Flare Gas to Compressor	C	Alarm High 18.5 psia Alarm Low 14.7 psia
PI-1881 (A) PI-1882 (B) PI-1883 (C)	Compressor Dual Seal Low Pressure Alarm	Compressor Seal	C	Alarm Low 50 psig
Temperature				
TI-1540	Suction Temperature Alarm and Shutdown	Compressor Suction	C	Alarm High 150 ^{o}F Alarm High High 170 ^{o}F (SD)
TI – 1547 (A) TI-1548 (B) TI-1549 (C)	Compressor Temperature Discharge Gas Temperature Indication, Alarm, & Shutdown	Discharge of Compressor	C	Alarm High 150 ^{o}F Alarm High High 170 ^{o}F (SD)
TAH-1545	Service Water Temperature Alarm	Service Water to Compressor	C	Alarm High 150 ^{o}F

Liquid Ring Flare Gas Recovery Compressor (G-540 A/B/C) Monitors & Instruments				
Tag Number	***Description***	***Location***	***Att***	***Setpoint or Alarms***
Analyzer				
VI-1541 (A) **VI-1542 (B)** **VI-1543 (C)**	Compressor Vibration Alarms	Connected to compressor	C	High Alarm 0.4 in/second High High Alarm 0.6 in/second (SD)
Level Indicator				
LI-1881 (A) LI-1882 (B) LI-1883 (C)	Compressor Dual Seal Low Level Alarm	Compressor Seal	C	Alarm Low 35%
LAHH-1543	Compressor Suction Liquid Level Alarm and Shutdown	Compressor Suction	C	Alarm Low 32%
LAHH-1540	Gas Separator Drum Liquid Level Alarm & Shutdown	F-540 Gas Separator Drum	C	Alarm High 85% Alarm High High 99% (SD) Alarm Low 15.2% Alarm Low Low 4.3% (SD)
LAH-1542	Gas Separator High Level Alarm	F-540 Gas Separator Drum Blowdown Side	C	Alarm Low 10%

2.2.4 Flare Monitoring Instrumentation Description

BAAQMD 12-11 and 40 CFR 63 Subpart CC identifies criteria for monitoring flare gas flow and supplemental gas. 40 CFR 63 Subpart CC added requirements for steam measurement and heating value of flare and supplemental gas. The instrument locations were selected in accordance with manufacturer guidelines and the requirements in 40 CR 63 Subpart CC, as applicable. Flare data is collected and recorded in the site data historian. Data is maintained for a minimum of five years.

2.2.4.1 Vent Gas Flow, Steam Assist and Supplemental Rate Monitoring

BAAQMD 12-11 and 40 CFR 63 Supart CC requires each affected flare to be equipped with a flow meter that provides a representative measurement of the total flow rate discharged to each flare. The flow rate data collected is used to determine if flaring events occur that exceed the RCA threshold of 500,000 scf in a 24-hour period.

RSR amendments to MACT CC (40 CFR Part 63), effective January 30, 2019, require subject sites to install, operate, calibrate, and maintain a monitoring system capable of continuously measuring, calculating, and recording the volumetric flow rate in the flare header or headers that feed the flare as well as any flare supplemental gas used. This volumetric flow data along with other measured parameters will be used to determine compliance with the net heating value of flare combustion zone gas (NHVcz) at each flare.

The following standards for the vent gas flow meters are required pursuant to 40 CFR 63, Appendix to Subpart CC of Part 63—Tables, Table 13:

- Must be located in a position that is representative of the total gas flow rate;
- Must have a flow sensor accuracy of +/-20% at velocities ranging from 0.1 to 1 foot per second and an accuracy of +/-5% for velocities greater than 1 foot per second.
- Must be maintainable online,
- Ensure that the readout of the moitored operating parameter is readout accessible onsite for operational control or inspection,
- Must continually correct for pressure and temperature and record flow in standard conditions.
- At least quarterly, perform a visual inspection of all components of the monitor for physical and operational integrity and all electrical connections for oxidation and galvanic corrosion if the flow monitor is not equipped with a redundant flow sensor.
- Recalibrate the flow monitor in accordance with the manufacturer’s procedures and specifications which is annually.

Each flare uses an ultrasonic flow meter to continuously measure the flow rate to the flares. Each flow meter is manufactured according to the specifications in the rule, and the refinery has ensured that each flow meter is installed in a representative location of flare gas flow rate, thereby complying with the selection and installation of the flow meter. The following table summarizes the specifications of each flow meter in use.

Flare Flow Meter Specifications		
Meter No.	FLRE:FI520 (Main) – Waste Gas FLRE:FI586 (Main) – Waste Gas FLRE: FI585 (MP30) – Vent Gas (Waste & NG) FLRE:FI584 (MP30) – Vent Gas (Waste & NG)	FLRE:FI580 (MP30) – Waste Gas
Make	General Electric	SICK
Model	DigitalFlow™ GF868	MCUP-SNB3CE00000NSN
Type	Ultrasonic Flare Gas Flow Meter	
Range	0.1 fps to 328 fps	
Precision	Repeatability = ±1%	
Accuracy	±0.5% +/-20% at velocities ranging from 0.1 to 1 fps and +/-5% for velocities greater than 1 fps	

The meter configuration is a dual-channel bias-90 configuration with temperature and pressure corrected readings. The pressure and temperature readings are used to automatically correct the raw flow meter reading to standard condition flow rates and are reported to the Distributed Control System (DCS). Since the flow meter uses a dual-channel configuration (i.e., two sensors), no quarterly visual inspections of the meter are required. Each flow meter is recalibrated on an annual frequency in accordance with the manufacturer's specifications. The flow meter will be inspected during each calibration verification. Since the flowmeter has no moving parts and is constructed of materials designed to withstand the corrosive environment of the flare vent gas, the manufacturer does not recommend any further routine maintenance. In some cases, the meter includes natural gas purge, sweep or supplemental flow to the flare, in other cases it does not. Attachment C contains Process Flow Diagrams (PFDs) for each flare and their respective monitoring configuration. In cases where natural gas purge, sweep or supplemental flow is downstream of the Flare Flow Meter the purge meter is utilized in conjunction with the Flare Flow Meter to determine the Vent Gas.

Under 40 CFR 63.670, RSR requirements allow for mass flow monitors to be used for determining volumetric flow rate of assist steam. The refinery has installed necessary mass flow monitors to aid assist steam rate determination at each of its flares.

Steam Meter Specifications	
Meter No.	FLRE:FI2673 (Main Flare) FLRE:FI2676 (MP30 Flare)
Make	SICK
Model	FLOWSIC100 EX-S-RE
Type	Ultrasonic Mass Flow Meter
Range	0 – 100 Mlb/hr
Precision	-1 (shown in decimal)
Accuracy	+/- 2.5-5.0% of reading at range 0.3 m/s up to max value of measuring range

The following standards are required pursuant to 40 CFR 63, Appendix to Subpart CC of Part 63—Tables, Table 13:

- ±5 percent over the normal range measured for mass flow.
- Record the results of each calibration check and inspection.
- Locate the flow sensor(s) and other necessary equipment (such as straightening vanes) in a position that provides representative flow; reduce swirling flow or abnormal velocity distributions due to upstream and downstream disturbances.

Under 40 CFR 63.670, RSR requirements allow for mass flow monitors to be used for determining volumetric flow rate of assist steam. The refinery has installed necessary mass flow monitors to aid assist steam rate determination at each of its flares.

The refinery has added the following natural gas meter for enhanced supplemental gas control and monitoring.

Supplemental Gas (Natural Gas) Monitoring	
Meter No.	FLRE: FI2672 (Main Flare) *MP30 flare NG is monitored with the Flare Flow meter*
Make	GE Baker Hughes
Model	PFM8M-Z1G-03-1-CS-4-2-3-1L-1-1-2-A-1-1-20-1-0
Type	Ultrasonic Mass Flow Meter
Range	0 – 150 MSCFH
Precision	-1 (shown in decimal)
Accuracy	'+/-0.075 ft/s at flow range of 0.5 to 5 ft/s +/-1.5% of reading at flow range of 5 to Vmax/s

The following standards are required pursuant to 40 CFR 63, Appendix to Subpart CC of Part 63—Tables, Table 13:

- ±5 percent over the normal range of flow.
- Record the results of each calibration check and inspection.
- Locate the flow sensor(s) and other necessary equipment (such as straightening vanes) in a position that provides representative flow; reduce swirling flow or abnormal velocity distributions due to upstream and downstream disturbances.

The refinery meter installations comply with all of the standards required pursuant to 40 CFR 63, Appendix to Subpart CC of Part 63—Tables, Table 13. For instruments required by RSR details regarding the specifications of each vent gas, supplemental gas, and steam flow meters, including the precision, accuracy, calibration, maintenance procedures, and quality assurance procedures are maintained onsite in equipment databases. In addition, preventative maintenance is tracked via the work order database utilized by Phillips 66.

2.2.4.2 Heating Value Determination

As part of the Refinery Sector Rule (RSR) changes under 40 CFR 63 Subpart CC, there are new requirements for flares which include combustion efficiency standards effective beginning January 30, 2019. The standard requires that a determination of the Net Heating Value (NHV) of vent gas for each affected flare must be determined through prescribed methods via compositional monitoring of the vent gas. US EPA provided the options of a Calorimeter, Gas Chromatograph, and/or Grab Samples for compositional monitoring of the flare vent gas.

The refinery has chosen to comply with the new RSR NHV requirements at its flares by installing Calorimeters with a Hydrogen measurement module. . The Hydrogen measurement module is in place to provide for Hydrogen combustion correction as allowed in 40 CFR 63.670(l)(3).

The facility takes grab samples for flare activity as required by BAAQMD 12-11. Hydrocarbon species of the grab samples is determined in accordance to BAAQMD 12-11 . The refinery reserves the ability to use the hydrocarbon species results to determine Net Heating Value, as needed, if the calorimeter is not functioning.

Natural gas is utilized as supplemental gas which is metered independently in the Main Flare. In accordance to 63.670(j)(5) the heating value of 920 Btu/scf is utilized in addition to the heating value provided by the Calorimeter for the refinery waste gas. Daily gas chromatograph data is available by the Natural Gas utility supplier. The refinery reserves the ability to use the daily calculated Net Heating Value from the gas chromatograph speciated results.

The following table summarizes the specifications of the chosen calorimeter:

Calorimeter & Hydrogen Measurement	
Make	HOBRE
Model	WIM COMPAS
Type	Calorimeter – NHV Frontal Elution - H2
Precision	-1 (decimal)
Accuracy	+/- 1% of full scale

The following standards are required pursuant to 40 CFR 63, Appendix to Subpart CC of Part 63—Tables, Table 13:

- ±2 percent of span for Net Heating Value.

- +/-2 percent over the concentration measured or 0.1 volume percent, whichever is greater.
- Calibration requirements should follow manufacturer's recommendations, at a minimum
- Specify calibration requirements in your site specific CPMS monitoring plan
- Temperature the sampling system to ensure proper year-round operation

The refinery meter installations comply with all of the standards required pursuant to 40 CFR 63, Appendix to Subpart CC of Part 63—Tables, Table 13. For instruments required by RSR details regarding the specifications of each vent gas, supplemental gas, and steam flow meters, including the precision, accuracy, calibration, maintenance procedures, and quality assurance procedures are maintained onsite in equipment databases. In addition, preventative maintenance is tracked via the work order database utilized by Phillips 66.

2.2.5 Pressure Relief Devices (PRDs) to Flares

All pressure relief valves/devices (PRV/PRD) are tracked in an electronic software tool. The software tool contains information including manufacturer, tag number, type, size, set pressure, orifice size and numerous other details. The tool is cross-referenced with the facility work order scheduling and tracking system known as SAP. The site also documents the design basis for all of the relief devices to the flares. The system contains the information from the software tool includes how the required relief rate is determined for each PRV. Attachment J of this document lists Pressure Relief Devices/Valves that are discharged to the flares.

PRV's are removed, inspected, tested, and recertified according to the API 510 Pressure Vessel Inspection Code. API 510, in conjunction with several other API inspection codes, dictates how the interval is established. In general, the intervals are coincident with a unit turnaround, but not always, with API 510 accounting for the difference. The facility utilizes the Risk Based Inspection (RBI) review procedure for determining inspection frequencies based on RV service and history. In addition to API 510 the facility follows the following codes, regulations, and standards at the site in regard to PRV design, inspection, and maintenance.

- ASME Boiler & Pressure Vessel Code, Section I for Power Boilers and Section VIII for Unfired Pressure Vessels.
- ANSI/ASME B31.3 Chemical Plant and Petroleum Refinery Piping Code
- API 510 Pressure Vessel Inspection Code
- API 520 Sizing, Selection, and Installation of Pressure-Relieving Devices in Refineries, Parts I & II
- API 521 Guide for Pressure-Relieving and Depressuring Systems
- API RP 526 Flanged Steel Safety Relief Valves
- API RP 576 Inspection of Pressure Relieving Devices

In addition to the PRV processes identified above the facility is required to conduct PHAs to identify and mitigate potential risk to personnel and/or equipment. These PHAs look at measures in place to prevent events with unintended consequences. Based on potential risk identified, as these PHAs are conducted mitigation to prevent unintended consequences are put in place. Thus, this mitigation employed following the PHA has a beneficial effect of preventing some unit upsets that could trigger use of PRVs vented to the flare. In addition, the refinery conducts Root Cause Analysis (RCAs) for

various threshold triggering flare events and identifies required corrective actions to prevent recurrence. This also, when applicable, identifies measures to reduce the occurrence of PRVs venting to the flare.

The facility also employs applicable redundant prevention measures, at affected pressure relief devices onsite that can discharge to flares, that comply with requirements under 40 CFR §63.648(j)(3)(ii). These preventive measures are documented under various facility documentation like Process Safety Information, Operating Limits, Refinery Policies etc.

3.0 Reductions & Planned Reductions

3.1 Reductions Previously Realized (401.2)

Changes or Equipment in Place prior to 2003 which Prevent or Minimize Flaring

Due to economics and community concern, the refinery has a long history of flare minimization practices. The Flare Gas Recovery Compressor (G-503) was installed in the early 70's. Up until 2000 the facility utilized a ground flare that was located near I-80. When the flare was utilized the flame was very visible from the highway. Prior to 2000 the Refinery Management had expectations for Operations to increase facility reliability to prevent upsets and to develop a means to conduct Startups & Shutdowns with minimal flaring. Those practices remain in place today.

Another item of note is the existing Sulfur Recovery Unit system. The facility has three Sulfur Recovery Units (U235, 236, & 238) which can provide for significant redundancy. This has allowed the facility to experience only one instance of acid gas flaring in the past five years from a complete refinery shutdown.

In 1999, the Unit 200 Wet Gas Compressor (G-501) seal was upgraded to a dry seal system. Previously, the seal would fail every 12 – 24 months which required a seal replacement. The seal replacement would take approximately 5 – 6 days and flaring would occur throughout this period. After the dry seals were installed, the on-line performance of the Compressor significantly improved. The compressor has not experienced a seal failure since the seal upgrade. The upgrade has resulted in a reduction of approximately 4 - 6 MMSCFD of gas flared for approximately 5 days every 12 – 24 months.

Starting in 2003 weekly updates and quarterly Key Performance Indicators (KPIs) are reported & distributed with Flaring History to all Refinery employees. The content and distribution of the KPIs is described in Environmental Services Department (ESD) Policy and Procedure 1.1 "Environmental KPIs". The KPIs issued show trends and causes for flaring events and other reportable environmental events. The KPIs helps reduce flaring by showing all employees this is important in that it is tracked and communicated.

Changes Made to Reduce Flare Emissions

June 2012 to July 2019

In accordance with 401.2, listed below are reductions that have been made to reduce flaring over the past 5 years. Many of the items listed are Management System improvements. Although some of these improvements are difficult to quantify, they have had a significant impact on minimizing flaring.

Changes Made to Reduce Flare Emissions (June 2012 – July 2019)	
Year Installed or Implemented	***Equipment Item Added, Process Changed or Procedure Implemented***
Procedures:	
1st Qtr 2013 (updated)	**Refinery Policy & Procedure (P&P) 6.05-05 "Flare Monitoring & Reporting"** - • Procedure created to communicate flare sampling, monitoring, & root cause analysis requirements. The contents of the procedure include Responsibilities for personnel at the refinery in respect to flare compliance activities. • Sets standards for accountability in regards to monitoring, reporting, and preventing recurrence. • Criteria for agency release reporting (i.e. CA OES, CCC HSD, BAAQMD, NRC, etc.) for flare events. • Summary of BAAQMD 12-11 flare monitoring requirements (e.g. video, flare flow, sampling), • Summary of various regulatory reporting requirements. • Criteria for incident investigation in respect to BAAQMD regulations and the Phillips 66 EPA Consent Decree. • Means to track flare events with P66 Corporate incident tracking system. This procedure reduces flaring by demonstrating to employees that those who have defined roles must follow the steps outlined in the procedure and that these activities are important. It also mandates expectation for consistent evaluation of flaring events & development of corrective actions to prevent recurrence.

Changes Made to Reduce Flare Emissions (June 2012 – July 2019)	
Year Installed or Implemented	***Equipment Item Added, Process Changed or Procedure Implemented***
3rd Qtr 2013 (updated)	**Refinery Policy & Procedure (P&P) 10.00-01 "Incident Investigation" & Incident Investigation Training** - P&P 10.00-01 establishes responsibilities, event triggers, and typical means for conducting incident investigations. The contents of the procedure include: • Definition of the types of incidents that can occur (i.e. minor, serious, major). • Responsibilities for employees that discover an incident and who must complete tasks in respect to incident investigations. • Establishes accountability. • Description of whom and when personnel should be notified of incidents. • Defines who should participate in an incident investigation. • Description of the investigation process. • How the findings of an incident investigation are reviewed. • How findings of an incident investigation should be communicated to employees and Phillips 66 sister refineries. • How corrective actions should be addressed. The existing procedure was updated to denote environmental related events requiring incident investigation. Flaring events are identified in the procedure. P&P 6-7 cross references P&P 5-1. This procedure reduces flaring by demonstrating to employees that those who have defined roles must follow the steps outlined in the procedure and that these activities are important. Without this procedure incidents which occur would not necessarily be investigated and addressed in a consistent fashion. The main value in flaring reduction is that this procedure requires that corrective actions be developed and addressed for incidents. To ensure good quality investigations are conducted the facility identified key personnel to receive incident investigation training. Training ensured that first reporting (basic who, what, when, where) captures critical initial information. The training also ensures that investigations receive the necessary level of investigation and get to defined root causes. Additional work is on-going to improve and maintain the quality of the investigations conducted.

Changes Made to Reduce Flare Emissions (June 2012 – July 2019)	
Year Installed or Implemented	***Equipment Item Added, Process Changed or Procedure Implemented***
Procedures:	
2nd Qtr 2013 (updated)	**Emergency Operating Procedure EOP-1 "Guidelines for Standard Public Address System Announcements" -** Enhanced Communication within the Facility when Flare Gas Recovery System Load Increases – For example, the facility Public Announcement system is currently used if an increase in the compressor load occurs. This requires process units to review their operations in order to find the cause of the increase and take actions to mitigate. This prevents some flaring events from occurring in that discretionary gases, such as nitrogen purges and hydrogen, sent to the flare gas recovery system can be scheduled around peak loading periods to maximize gases recovered. Coordination of these activities is done through Operators at various units and Shift Supervisors working together to coordinate their activities in respect to use of the flare gas blowdown system. This minimizes flaring by consciously identify periods in which the blowdown system can be utilized without overloading the flare gas recovery compressor. This results in less periods of flaring due to brief peak loading of the compressor. In addition to this process, the Public Announcement system is utilized during planned and emergency events as specified in some of the Unit 200 procedures (ESOP & NSOP-*various*-200) to improve equipment use and switching. For example, if the Flare Gas Recovery Compressor (G-503) is put into Wet Gas or Odor Abatement service the public announcement system will be utilized to notify plant personnel of the change in operation. Listed below is a partial list of some of the key procedures where the public announcement system use is referenced:

Changes Made to Reduce Flare Emissions (June 2012 – July 2019)	
Year Installed or Implemented	***Equipment Item Added, Process Changed or Procedure Implemented***
	Normal Operating Procedures • NSOP-001-200 Relief "U200 Table of Safe Operating Limits" • NSOP-306-200 "Light Ends Shutdown, Unit Running" • NSOP-704-200 "G-501 Compressor Shutdown & Clean-up" • NSOP-707-200 "G-503 Flare Compressor Planned Shutdown" • NSOP-709-200 G-503 Flare Compressor Start-up • NSOP-710-200 "Switching G-503 to Wet Gas Service" • NSOP-711-200 "Switching G-503 from Wet Gas to Flare Service" • NSOP-716-200 "Switching G-503 to Odor Abatement Service" • NSOP 717-200 "G-503 Flare Compressor Circulation" **Emergency Operating Procedures** • ESOP-700-200 "Loss of G-501 Compressor" • ESOP-701-200 "G-503 Compressor Failure"
3rd Qtr 2013	**Loss of Emergency Gas Flow to Air Liquide (REOP-25-OPS)** - A new Refinery Emergency Operating Procedure (REOP) was developed in response to the June 10, 2013 flaring event after loss of RFG-A to Air Liquide. This procedure will help to reduce the flaring of sour flare gas by improved management of the RFG-A gas at Unit 240 Plant 3 and it should also reduce the overall flaring time for this type of event with improved management of the Flare Gas recovery compressors.
2nd Qtr 2011	**Loss of Hydrogen (REOP-21-OPS)** Hydrogen is a critical refinery utility. Loss of 3rd party of site produced hydrogen can result in unit upsets. This procedure helps guide user, typically Shift Superintendent, to make the necessary operational moves in a sequenced fashion to reduce impacts to the refinery. These operational moves help reduce potential rate of flaring that can occur with hydrogen loss.
1st Quarter 2018	**Activity on the Refinery Flare/Blowdown Systems (REOP-12-OPS)** A multi-step procedure was developed to help assist the facility Shift Superintendent coordinate between affected units when there is refinery flare activity and how to quickly respond in order to mitigate flaring in an efficient manner. The procedure incorporates the requirement to review the "Flare System Rundown List" when there is flare activity or heavier than expected load on the Flare Gas Recovery Compressor(s) but the cause is not immediately known.

Changes Made to Reduce Flare Emissions (June 2012 – July 2019)	
Year Installed or Implemented	***Equipment Item Added, Process Changed or Procedure Implemented***
On-Going	**Environmental Operating Limits (EOL) Standard**. The Rodeo Refinery implemented a new Phillips 66 Corporate Standard designed to enhance existing refinery Environmental monitoring practices. As part of the EOL standard, Environmental, Technical Services, and Operations personnel reviewed site permit, regulatory and other legal requirements and created a new document for Operators and Operation Supervisors to ensure Environmental compliance. When applicable, pre-alarms were developed to alert Operations in order to execute pre-defined corrective actions to avoid non-compliance and flaring incidents. The program is reviewed periodically and updated, as necessary. The EOL table includes flare limits and appropriate response to potential flaring activity above allowable limits.
On-Going	**Reliability Operating Limits (ROL) Standard.** Similar to the EOL Standard referenced above, Phillips 66 maintains a Corporate Standard designed to enhance existing reliability monitoring practices. ROLs are established for a suite of equipment in order to identify parameters that have potential to have an impact on the reliable operation of units and/or equipment. This includes equipment such as flare compressors, utility compressors, critical pumps, etc. Once the ROLs have been identified alarms have been developed to alert Operations when to initiate action based on defined criteria. This standard helps prevent unplanned equipment and unit shutdowns or damage which typically corresponds to improved environmental compliance and performance.
Equipment:	
1st Quarter 2019	**EPA Refinery Sector Rule (RSR) 40 CFR 63 Subpart CC Flare Combustion Efficiency Upgrades –** all affected refinery flares are required to ensure compliance with sections 63.670 and 63.671 of 40 CFR 63 Subpart CC. This requires high accurate monitoring of steam flow to the flares as well as prescribed net heating value (NHV) determination for vent gas to the flare. Flare activity occurring post January 30, 2019 must comply with the 63.670 combustion efficiency standard of 270 Btu/scf. The Rodeo Refinery has made upgrades to the steam measurements and controls as well as securing a new NHV monitor.

Changes Made to Reduce Flare Emissions (June 2012 – July 2019)	
Year Installed or Implemented	***Equipment Item Added, Process Changed or Procedure Implemented***
Processes:	
1st Qtr 2011 - 2013	**Unit 110 Hydrogen Plant Startups and Shutdowns –** changes have been made in how Unit 110 startups and shutdowns, when conditions warrant, to minimize flaring. For example, a shutdown takes place and human entry is not required, the unit may be purged with plant Nitrogen rather than hot, pumped Nitrogen. This allows for the Nitrogen to slowly be swept into the blowdown system, allowing for the Fuel Gas Recovery Compressor to remain operating. For some shutdowns the amount of flaring has been eliminated vs. a previous average period of of 5-1/2 hours. Unit startups have also been reduced from a period of approximately 2-1/2 hours in comparison to the previous duration of 5 hours. Throughout 2011 and 2012 efforts to minimize Unit 110 related flaring has continued by examining steps related to startup and shutdown activities. In 2013 a procedure NOP-206-110 was developed to allow for U110 startup with minimal flaring. This is partially done utilizing natural gas feed at a low rate to minimize potential flaring.
On-Going	**Flare System Rundown List (R-065)** – A checklist was developed for looking for possible sources (lines and monitoring tags) at operating units which may be contributing high base load to the flare compressors and/or directly to the flare. This checklist is to be used by Shift Superintendents, Head Operators, and Unit Supervisors to pinpoint and locate higher than normal flows.
3rd Quarter 2014	**Unit 110 Hydrogen Plant Control Scheme Upgrade** the control scheme for Unit 110 was updated to allow for a better transition between a 10-bed to 5-bed Pressure Swing Adsorber (PSA) operation. When a need to reduce the number of operating PSA Hydrogen purification beds from 10 to 5 the feed to the unit will also automatically adjust. This will reduce the amount of Hydrogen that enters into the blowdown system and will reduce or eliminate flaring associated with this operational transition.

3.2 Planned Reductions (401.3)

The table below summarizes the actions currently planned to effect further reductions in refinery flaring.

Planned Actions for Reducing Flaring

Planned Actions for Reducing Flaring	
Planned Date of Installation/ Implementation	***Equipment Item to be Added, Process to be Changed or Procedure to be Implemented***
<u>Procedure:</u>	
Equipment	
<u>Phased 2006 – 2013</u> • 2006 – MP30 (complete) • 2009 – Sulfur Plant (complete) • 2009 – UK (complete) • 2011 – U200/ U267/U250 (complete) • 2014 - U110 & SPP (complete) • 2015 – U100 & Bulk (complete) *(completion dates listed)*	**Construction & Operation of Central Control Room (CCR)** The CCR has been built and currently contains the controls and boardmen for all the process, utility and bulk movement units. The Boardmen are the Operators that oversee the unit operation and provide direction to Outside Operators. The Boardmen were housed in Control Rooms at their individual units The CCR brings all the Boardmen together in one large control room. There is an inherent value in having the Boardmen housed in one Control Room that will minimize flaring. Improved communication will occur and better awareness of each unit's impact upon another unit's operation will occur. In addition, optimization by Operations Supervision will be simplified when the unit controls are housed in one Control Room. An example of this benefit is that if one unit is nitrogen purging a vessel which will add loading to the U200 G-503 Flare Gas Recovery Compressor the Boardman can immediately talk to the Unit 200 Boardman about whether or not additional loading can be handled. As the purging is taking place the two Boardmen can work closely together to monitor the impact of purging and provide immediate feedback as to the impact of the activity on the Compressor. Adjustments can be made much more quickly to manage the activity. This enhanced coordination will reduce in flaring.

Planned Actions for Reducing Flaring	
Planned Date of Installation/ Implementation	***Equipment Item to be Added, Process to be Changed or Procedure to be Implemented***
<u>Phased 2006 – 2013</u> • 2006 – MP30 (Complete) • 2009 – Sulfur Plant (complete) • 2009 – UK (complete) • 2011 – U200/ U267/U250 (complete) • 2014 – U110 & SPP (complete) • 2015 – U100 & Bulk (complete) *(completion dates listed)*	**Controls Modernization** – a series of controls modernization projects were completed in 2015. Listed below are the benefits of the modernization projects in respect to flare minimization. • Provides for enhanced diagnostic tools (i.e. graphics of unit operation are much more visible and easy to follow) in units where Distributed Control Systems (DCS) are not currently in place (MP30 & Sulfur Recovery Units). • Reduction of control system instrumentation failures due to upgrade from old, pneumatic technology. This will result in much better reliability of the controls. • Increases unit stability and minimizes unit upsets. • Improves operator performance by incorporating Abnormal Situation Management practices such as alarm management and graphic guidelines. Alarm management is a philosophy which prioritizes alarms and minimizes the amount of alarms an operator must respond to in an abnormal situation. This prevents an operator from being overloaded with alarms and helps the operator focus on the immediate issues which must be remedied. • Use of human factors in information processing in order to communicate information in a proven, consistent, simplified, meaningful way. Early event detection to reduce abnormal situations which might cause an upset. Installation of state of the art Safety Instrumented Systems (SIS) that will minimize spurious trips. Overall, the Controls Modernization will reduce flaring by minimizing upsets that can occur with the current controls in place. Improving the way that operators interface with controls allows them to prioritize their response to abnormal situations. This can result in more rapidly mitigating an unusual situation and minimizing overall impacts. One example would be by upgrading field tags (which are monitoring devices for operating parameters such as pressure or temperature, currently only visible in the field) to a tag which can be monitored in the control room. For example, if an equipment shutdown occurs and the parameter which shut the equipment down is a field tag, the modernized control system will more rapidly pinpoint the cause of the shutdown. The upgraded field tag would now be able to be seen rapidly by the Board Operator which will assist in restarting the piece of equipment more rapidly. This will reduce flaring.

Planned Actions for Reducing Flaring	
Planned Date of Installation/ Implementation	***Equipment Item to be Added, Process to be Changed or Procedure to be Implemented***
1st Quarter 2021 County Land Use Permit undergoing re-approval process [1] [1] *Re-approval process following Superior Court decision to void previous approval due to EIR deficiencies*	**Propane Recovery Project –** The Authority to Construct for this project application was issued by BAAQMD on March 18, 2015. The purpose of the project is to recovery propane and butane from the refinery fuel gas (RFG). Another aspect of the project is to remove a portion of the sulfur compounds from the remaining Refinery Fuel Gas (RFG). From a flaring standpoint, this project is beneficial in reducing overall volume of Refinery Fuel Gas. The propane and butane will be replaced by natural gas provided by PG&E. Because it is relatively easy to reduce the amount of natural gas being imported, the likelihood of flaring due to fuel gas imbalance will be reduced. In addition, by reducing the concentration of sulfur in fuel gas this removes some of the restrictions on where fuel gas can be routed which further helps to minimize and reduce periods of potential fuel gas imbalance.
4th Qtr 2019	**Unit 240 D-411 Hydrogen Re-routing During Unicracker Plant 2 Shutdown (SFE 17-103)** – Currently when the Unicracker Plant 2 shuts down there can be excess mixed hydrogen in the hydrogen header. Mixed hydrogen contains hydrogen produced from catalytic reformers and PSA high purity hydrogen. Currently, when there is excess mixed hydrogen it is sent to blowdown and then on to the site Flare Gas Recovery Compressors (FGRC) where it can be potentially recovered and utilized as fuel gas. If there is too much hydrogen concentration in the gas routed through the FGRC this can result in compressor shutdowns due to poor gas quality. A FGRC shutdown would result in the flaring of mixed hydrogen and sour recovered gas. High levels of hydrogen in recovered fuel gas can also be a problem for heater operation which demands minimum fuel heating value. This project will re-route the potential discharge of this mixed hydrogen from blowdown to the Unit 240 F-201 relief header which goes directly to the flare rather than to the FGRC and fuel gas. Thus, if the system pressure dictates that mixed hydrogen must be pressure relived it will do so directly to the flare. This will help reduce the total volume of material sent to the flare and reduce the emissions of Sulfur Dioxide (SO_2) if flaring does occur.
Processes:	
On-going	**Improved Incident Analysis Investigation** – Continue to complete required 12-12 Root Cause analysis and analysis triggered by internal incident investigation drivers. Investigations and corrective actions identified will continue to address issues that may result in flaring if not otherwise addressed. The root cause analysis requires that the facility find the actual cause of flaring, down to a single part that may have failed in some instances. The 12-12 analysis also requires the facility to identify changes that can be made to prevent flaring and list those in the root cause analysis submittal to BAAQMD. This results in the facility taking action to prevent recurrence of flaring events. For example, some of the recent root cause analysis have identified equipment upgrades that should be made, additional training to be conducted, equipment repairs, etc.

Planned Actions for Reducing Flaring	
Planned Date of Installation/ Implementation	***Equipment Item to be Added, Process to be Changed or Procedure to be Implemented***
Permit Application Submitted 12/2011 Target Completion - Awaiting BAAQMD and EPA Decision	**Fuel Gas Combustion Sulfur Dioxide Emissions** –A permit application was submitted to BAAQMD to obtain new Sulfur Dioxide (SO2) limits for the Steam Power Plant (SPP) via permit modification. This would allow greater percentage of refinery fuel gas to natural gas to be fired in the turbines. By revising the SPP emission limits it is possible that a large portion of flaring during periods of fuel gas imbalance could be minimized while reducing overall combustion emissions. Historically fuel gas imbalance occurred during major Unicracker turnarounds when 30% of fired duty sources are shutdown. Discussions were previously held with BAAQMD permit engineers in 2007 to review the benefits and potential permitting mechanisms for repermitting SPP. Numerous discussions and responses have been provided to BAAQMD in respect to the permit application and permit revisions. BAAQMD has been provided the necessary supporting information and must approve and finalize the permit in order for the facility to implement this item. Phillips 66 petitioned the U.S. EPA in April, 2014 for an official applicability determination regarding whether this change would trigger NSPS. BAAQMD is currently awaiting the response from EPA prior to finalizing their decision whether or not to approve the permit.
On-going	**Flare Activity Review –** Soon after a reportable flaring event occurs an overview of the event is communicated between site management to quickly review likely causes and means to prevent recurrence.
Maintenance:	
On-going	**G-503/G-540 Flare Gas Recovery Compressors** - this practice began more than 5 years ago and continues to date. Approximately every 18 months, in association with a major unit turnaround, the G-503 Flare Gas Recovery Compressor is taken out of service for a major overhaul. The purpose is to maintain critical equipment associated with the compressor in order to prevent unplanned failures. This practice minimizes overall downtime for the compressor. The work is scheduled with a major turnaround since gasses produced at the facility are at reduced rates and many fuel gas consumers are out of service. Without this maintenance it is more likely that the compressor would experience unplanned failures during periods when high gas volumes are being produced. The unplanned failure repair is of longer duration because the personnel and equipment must be assembled without advanced planning. In many cases, diagnosis must be performed to determine the failure and this can take considerable time. Whereas, planned maintenance prevents many of these types of failures from occurring. As with regular maintenance on a vehicle, this maintenance performs a similar purpose. Now that the new Liquid Ring Flare Gas Recovery Compressor has been installed all flare gas recovery compressors will be maintained on a routine basis yet it will be done when the spare compressor(s) are in operation which will further reduce overall flare emissions.

4.0 Prevention Measures (401.4)

4.1 "Major" Maintenance Activities (401.4.1)

This section discusses refinery maintenance and turnaround activities, outlines measures to minimize flaring during both preplanned and unplanned maintenance activities. A description of flaring that occurs during major maintenance activities is included in this section and in the section titled "When Flaring is Likely to Occur" in accordance to 401.4.1. As required by 401.4.1 a review of flaring associated with major maintenance has been conducted and is referenced below. The measures taken to prevent flaring during portions of major maintenance activities are included in the section titled "Measures to Minimize Flaring During Preplanned Maintenance".

4.1.1 Refinery Maintenance and Turnaround Activities

Maintenance activities often result in a higher than normal flow of material to the flare gas recovery system. In order to maintain process equipment, the first step is to clear the process equipment and associated piping of hydrocarbons, before the system is opened to the atmosphere, for both safety and environmental reasons, including compliance with BAAQMD Regulation 8 Rule 10, (Process Vessel Depressurization). How this is accomplished depends on the physical properties of the hydrocarbons to be removed (vapor pressure, viscosity) and on the process details of the equipment that is to be maintained.

The first step is to recover as much of the hydrocarbon as is possible by transferring it to a process unit that is not in the part of the refinery that is being prepared for maintenance. For example, liquid hydrocarbons can be pumped to tankage or another process system; gases under pressure may be depressurized to another process unit. Heavy hydrocarbons that are viscous at ambient temperatures are often displaced from the equipment to be maintained using lighter hydrocarbons, e.g. diesel type material. This material can then be pumped from the equipment.

Although depressurization and pump-out can be used to remove the bulk of the hydrocarbon from the equipment, they leave some residual material. Following pump-out or depressurization to other process equipment, the next step in decommissioning typically requires a low-pressure location that has the ability to accept a wide range of hydrocarbon materials in order to avoid putting these materials to the atmosphere. The flare gas header is the only location within the refinery that meets these criteria. Equipment items containing materials that are gases at ambient temperature and pressure are often vented to the flare gas recovery system so that the hydrocarbon can be recovered as fuel gas. To free the equipment of hydrocarbons following depressurization, they can be purged using an inert gas such as nitrogen. Alternatively, nitrogen can be added to the equipment increasing the internal pressure. The resulting mixture of nitrogen and hydrocarbon can then be released to the flare header, reducing the pressure in the equipment. Steam can be substituted for nitrogen in some cases, but not for processes that need to be kept dry in order to avoid corrosion or catalyst damage, or for some other reason.

For equipment containing liquids, often steam or nitrogen are used to "blow" the liquid to the flare header. The liquid hydrocarbon and condensed steam are separated from the vapor phase and returned to the refinery's recovered oil system and to wastewater treatment either at the unit knockout drum or at the flare knockout drum. Nitrogen with hydrocarbon vapor continues on to flare gas recovery. Once the bulk of the liquid hydrocarbon has been displaced, the flow of steam or nitrogen is continued to remove any residual hydrocarbon by vaporization. Steam can be more effective for heavier materials as it increases their volatility by increasing temperature. Proprietary solvents such as "Zyme-flow" are sometimes used in aqueous solution for removal of residual hydrocarbons. When aqueous solvents are used, they are typically circulated in the equipment and then treated.

Although these procedures eliminate hydrocarbon emissions related to equipment opening, they require a high volumetric, high velocity, steam or nitrogen flowrate in order to be effective. This high flowrate of inert gas can create several sets of circumstances where flare gas recovery is not feasible. These problems relate either to the change in fuel gas composition (increased molecular weight or temperature) or to the increase in volumetric flowrate.

In addition to an increase in flare gas average molecular weight from higher than normal nitrogen flowrate, there is also the potential for much lower than average molecular weight gas from increased flow of hydrogen. There are many process and reactor systems within a refinery that contain gases with a high hydrogen content. When this equipment is decommissioned by depressurization to the flare gas header, there can be a sharp decrease in the flare gas average molecular weight.

Effect of Flare Gas on Downstream Equipment

Gas composition affects the equipment in the flare gas recovery system. Specifically:

- High nitrogen content can impact heaters, boilers and the flare gas compressor.
- Hydrogen and other low molecular weight gases impact flare gas compressor performance.
- Steam impacts knock out drums and compressors.

High flows of nitrogen from equipment purging leads to a much higher than normal inert content in the recovered flare gas, greatly reducing its fuel value (measured as Btu/scf) and increasing its molecular weight. Reciprocating compressor (G-503) increase the pressure of a constant inlet volumetric flowrate of gas. For a given volume of gas, an increase in molecular weight creates an increase in its mass. This increases the work that the compressor has to do to compress the gas, overloading and potentially damaging the machine.

For a reciprocating compressor, the compression ratio (ratio of outlet pressure to inlet pressure) is high enough that more than one stage of compression is needed. The temperature of the gas increases as it is compressed. The gas is cooled between stages in order to control the temperature increase. Operation of a reciprocating compressor with a feed stream that has a molecular weight outside of the range for which it was designed (e.g. high hydrogen content) can lead to a temperature increase exceeding the design limitations of the machine. Flare Gas Compressor (G-503) is shutdown in order to protect it from failure that could be caused by a decrease in molecular weight.

The Liquid Ring compressors are expected to have a wider range of operating conditions. The compressors and associated control system will have enhanced monitoring in comparison with the existing Reciprocating Compressor. There will still be limitations on the type of gases that should be recovered and utilized in the fuel gas system (i.e. high volumes of hydrogen potentially impacting Btu values).

Additionally, if low Btu flare gas is transferred to the fuel gas header, the lower fuel value can have the effect of reducing combustion efficiency, as the combustion device burners are designed to operate with fuels that have higher heat content per cubic foot. In extreme cases, the heating value of the gas can be reduced by dilution with nitrogen to the point of extinguishing the burner flame. This creates the potential for unburned fuel to accumulate in the heater or boiler, potentially leading to an explosion when it is re-ignited. NFPA 85 – Boiler and Combustion Systems Hazards Code and NFPA 86 Standards for Ovens and Furnaces warn against this possibility.

A major advantage of using steam to clear hydrocarbons from equipment is its elevated temperature; however this can be a disadvantage with respect to flare gas recovery. When the distance the gas must travel to reach the flare gas compressor is large, (the flare header is long), the gas will cool, and much of the steam will condense and be removed as water at the knock-out drum. However; with a shorter flare line or a long-duration steam out event, the temperature of the flare gas at the flare gas compressor can be elevated significantly. If the temperature of the flare gas stream at the inlet to the flare gas compressor exceeds machine limits, the gas must be diverted away from the compressor inlet in order to avoid mechanical damage.

Summary

Each of the situations described above potentially leads to the need to divert gas produced during refinery maintenance away from the flare gas recovery compressor and to a flare. This is a necessary result of maintenance procedures which have been adopted to minimize the release of hydrocarbons to the atmosphere during equipment opening. The need to divert gas is driven by the quantity and composition of the gases produced during equipment shutdown and startup.

Major maintenance activities can result in flaring, as discussed above. A review of maintenance-related flaring from 2000 to 2006 at the Phillips 66 San Francisco refinery in Rodeo has been completed. Due to the requirement to install flowmeters and report flare emissions to BAAQMD the data from September 2003 to date is the most accurate for this review. Subsequent flaring taking place during equipment startups and shutdowns are being examined as part of the Turnaround Planning Flare Minimization Process and causal analysis being conducted.

Based on the review there were means of further reducing and/or eliminating flaring that were identified. Included below is a summary of the measures identified and rationale for the acceptance or rejection of the concept:

Major Maintenance
Prevention Measure Evaluation

This is a list of prevention measures that were identified based on the 5-year look back of Major Maintenance activities. Attachment H is a summary of all flaring events and is grouped by category. Based on the 5-year look back the following types of flaring were identified for elimination:

- Flaring associated with Hydrogen Unit Startups/Shutdowns (H2 SU/SD)
- Flaring due to G-503 Flare Gas Recovery Compressor Planned Maintenance (G-503 PM)
- General Flaring Associated with Major Maintenance (.e.g. nitrogen purging, steaming, etc.) (General)

Major Maintenance – Prevention Measure Evaluation					
Measure Description	**Schedule for Implementation**	**Rationale to Support Schedule**	**Type of Flaring that would be Reduced or Eliminated**	**Rationale for Rejecting Measure**	**Section Reference** *(for more details)*
Addition of Unit 110 Hydrogen Vent	• Dec. 2006	Installation of a vent which will allow a small stream of purified hydrogen to be vented.	H2 SU/SD	n/a	3.2
Odor Abatement/Flare Gas Recovery System Optimization	• October 2008 – Construction Start • August 2009 (completed)	A set of 3 Liquid Ring Compressors were installed in order to provide redundant and extra capacity for the Flare Gas Recovery compressor. This will eliminate some flaring events that have historically occurred by having additional flare gas recovery service. A separate odor abatement compressor was installed which will provide further reliability for the odor abatement system.	G-503 SU/SD G-503 Brief Peak Loading	Completed	3.2
Turnaround (T/A) Planning Procedure	4th Qtr 2006	Being coordinated with submittal of Flare Minimization Plan.	H2 SU/SD G-503 PM General	n/a	4.1.3
Shutdown & Startup Activity Extension	4th Qtr 2006	This will be included as part of the T/A Planning Procedure. In some cases flaring may be eliminated or minimized by extending the period	General	To be included as part of T/A Planning Procedure process.	4.1.3

Major Maintenance – Prevention Measure Evaluation					
Measure Description	**Schedule for Implementation**	**Rationale to Support Schedule**	**Type of Flaring that would be Reduced or Eliminated**	**Rationale for Rejecting Measure**	**Section Reference** *(for more details)*
		that a unit is going through shutdown or startup. An example would be to nitrogen (N_2) purge equipment at a lower rate so the G-503 Flare Gas Recovery Compressor can handle the excess N_2. More importantly, the safest operating conditions for a unit are when it is out of service or when it is running at normal conditions. The transition period, which occurs during startup and shutdown, requires special attention and procedures. Equipment placed under these conditions experience temperature and pressure changes which can result in hydrocarbon leaks. Due to these factors it is necessary to minimize the duration of transition periods.		This will not be utilized in each case due to transitional activity concerns.	
Rate Reduction / Unit Shutdowns	4th Qtr 2006	This will be included as part of the T/A Planning Procedure process. In some cases flaring may be eliminated or minimized through reducing rates or shutting down units. The implications of shutting down a unit must be examined for each case. For example, shutting down additional units may result in more fuel gas imbalance (i.e. production of more gas then can be consumed). The refinery units are interrelated so shutting down one or two units will result in impacts to other units. In some cases a number of units must be shutdown in association with a particular unit. In order to properly shutdown units they must be depressured and purged. This typically results in flaring. So, the shutdown of associated units	General	To be included as part of T/A Planning Procedure process. It is not beneficial to use this for all situations as described in the previous column.	4.1.3

Major Maintenance – Prevention Measure Evaluation					
Measure Description	**Schedule for Implementation**	**Rationale to Support Schedule**	**Type of Flaring that would be Reduced or Eliminated**	**Rationale for Rejecting Measure**	**Section Reference** *(for more details)*
		doesn't reduce flaring in all cases and must be evaluated for the overall benefit on a case by case basis. Rate reduction is typically only of potential value if refinery is out of fuel gas balance. See Section 4.1.2 for the steps taken to mitigate fuel gas imbalances, including rate reduction. Some units may be an overall fuel consumer so reducing rate may not be helpful. The benefits need to be examined on a case by case basis.			
Implementation of Prevention Measures Identified during Causal Analysis Reporting	3rd Qtr 2005	Prevention Measures are identified during the required BAAQMD flare event Causal Analysis reporting. These measures are then implemented to reduce flaring. Note: General programmatic prevention measures identified will be listed in this section during Annual updates. Equipment specific prevention measures have been added to Attachment H.	Various	n/a	3.1
Identification of Cause of Small (<500,000 SCFD or <500 lb SO2) Flaring Activity	1st Qtr 2007	Conduct regular meetings with Operation personnel who are responsible for the flare operation to identify causes of all flare activities.	Various	n/a	3.1
Storage, Treatment, Recovery Scenario 1 – Addition of New 1.5	n/a	n/a	G-503 PM (portion)	Determined not to be cost effective.	4.2.2.1

Major Maintenance – Prevention Measure Evaluation					
Measure Description	**Schedule for Implementation**	**Rationale to Support Schedule**	**Type of Flaring that would be Reduced or Eliminated**	**Rationale for Rejecting Measure**	**Section Reference** *(for more details)*
MMSCF/D Compressor			General		
Storage, Treatment, Recovery Scenario 2 – Addition of New 6.0 MMSCF/D Compressor	n/a	n/a	G-503 PM General	Determined not to be cost effective. However, a set of three new Flare Gas Recovery Compressors were installed in conjunction with the Clean Fuels Expansion Project.	4.2.2.1
Storage, Treatment, Recovery Scenario 3 & 4 – Addition of New High Pressure Storage Sphere, Compressor, & Amine Treater	n/a	n/a	H2 SU/SD G-503 PM General	Determined not to be cost effective. Technological, operability, and safety feasibility not yet determined. It is likely that upon further study cost effectiveness will be further diminished. Operability and feasibility of safe operation of such a system may also pose a challenge.	4.2.2.1

Section 4.1.2 contains a list of measures that are currently in practice for reducing flaring.

From this review it is clear that one of the greatest potentials for achieving further cost-effective reductions in flaring lie in maintenance planning with flare minimization as a goal coupled with the existing goals of safety and minimizing production impacts due to extended downtimes. The essential component of any plan that satisfies maintenance needs while minimizing flaring is that it must mitigate or eliminate the conditions described in the sections above that make recovery of flare gas impossible. In practical terms this means taking a series of actions specific to the unit being decommissioned to limit the rate at which flare gas is generated and maintain its temperature and composition within a range acceptable for transfer via a flare gas compressor and for use in the fuel gas system. Concepts for accomplishing this are discussed in the section following.

4.1.2 Measures to Minimize Flaring During Preplanned Maintenance

In accordance with 401.4.1 in regards to feasible prevention measures that can be used to minimize future flaring: (including that related to scheduled process unit turnarounds and immediate near-term shutdowns) are listed below. Numerous prevention measures are utilized to prevent flaring from occurring during portions of major maintenance events. The information is organized by process unit and by topic. There are also some general measures listed that are used at most units, when applicable. Refer to Attachment E for list of unit names and numbers. It is noted that although prevention measures are routinely employed, as explained in the previous section, all flaring cannot be eliminated due to gas quality and quantity issues associated with major maintenance activities.

<u>Hydroprocessing (U228, U229, U230, U231, U240-2, U244, U248, U250)</u>

Hydroprocessing units are depressurized to hydrogen recovery, or other lower pressure locations , and only after this are they depressurized to flare gas recovery, reducing the load on the flare gas recovery system. This prevents flaring by minimizing load on the flare gas recovery system and decreases the period of time in which flaring occurs during venting activities.

Following depressurization, the remaining hydrocarbon is removed by increasing the pressure in the equipment with nitrogen and then depressurizing it to flare gas recovery multiple times. Doing this quickly helps with mixing, which improves removal of hydrocarbon from the vessel so that fewer cycles are needed. This minimizes the volume of low quality gasses that are sent to the flare.

Depressurization of the unit to the flare gas recovery system is staged in order to minimize exceeding the capacity or quality parameters of the system in order to maximize the time in which the flare gas recovery compressor is on-line. The longer the flare gas recovery compressor is on-line the less flaring that occurs.

Gases are recirculated using the hydrogen recycle compressors as the reactors cool. When the equipment is cooled and at low pressure, nitrogen pressurization and release steps are used to clear hydrocarbons. Hydrogen-containing streams are directed to the hydrogen plant. Use of hydrogen recycle for cooling and cleaning minimizes the need for nitrogen which, when utilized, typically results in flaring.

U250 - A high pressure hydrotreater design is used to avoid flow to the flare by containing the process during loss of utilities. Without this design, additional volume of materials would be sent to the flare during loss of utilities. See Section 3.1 for more details on elements of this design.

<u>Reformer (U231, U244)</u>

The timing of the steps involved in the regeneration cycle are controlled and the venting / depressuring rate limited to be within the capacity of the compressors. This minimizes the total vent stream that must be sent to the flare.

Delayed Coker (U200)

The delayed coker drum cooling cycle time is coordinated with other activities to prevent exceeding the Flare Gas Recovery Compressor capacity.

Fractionation Units (Various units, throughout refinery)

Vents from depressurization of fractionation units are recovered using the flare gas compressor system rather than being routed to the flare, when capacity is available or gas quality allows. This minimizes flaring by reducing the volume of gasses that must be sent to the flare.

Compressor (U200 Flare & Blowdown System)

Compressor Maintenance

In some instances, the flare gas recovery compressor (G-503) is placed in wet gas recovery compressor service (G-501) if the wet gas compressor is expected to be offline. This minimizes the total amount of gas flared. A greater volume of gas can be recovered by placing G-503 directly in Wet Gas service rather than directing the Wet Gas into the blowdown system. Recovering higher rates of gas reduces the volume recovered.

Flare gas compressors are maintained during planned unit shutdowns, to improve reliability during periods of normal operation. A planned shutdown provides an opportunity to do maintenance while flare system load is lower.

In the future, when the redundant new Liquid Ring Flare Gas Recovery Compressors are operational planned maintenance scheduling will be optimized and staggered to minimize and/or prevent flare gas recovery outages for compressor maintenance.

Regular preventative maintenance of flare gas compressors, as described further in Section 3.2, is used to improve their reliability.

Maintenance is also conducted on compressors based on critical monitoring (i.e. vibration, temperature, load) results.

Flare System Monitoring

Flare Gas Recovery Compressor load is monitored to identify & mitigate higher than normal baseline load. High loads are mitigated by identifying the source and making reductions. For example, if a PRV is venting to blowdown then the responsible unit will be identified and directed to make adjustments to prevent the PRV from venting.

The flare gas recovery compressor is monitored when maintenance is being conducted at other units that will cause the compressor to be taken off-line. The purpose is to minimize the amount of compressor downtime in order to protect the compressor and minimize the total time the compressor is shutdown and reduce overall flaring.

Plant personnel who oversee flare gas recovery systems have been instilled with an improved understanding. The operators monitor flare gas compressor load to check for high load or load changes, record instances of flaring and potential causes, take action to minimize flaring, and notify Shift Superintendents when flaring occurs. This results in conscious management of the flare system to minimize flaring.

Flow and/or temperature measurement as a means of indicating flow in each flare header is used to identify and eliminate sources of flow to the flare gas header. Indication of flow during periods when flow is not expected is a direct indication of flaring. As described above, operators respond to flaring events by attempting to track the source and working with the Shift Superintendent to take action to make reductions or eliminate flaring.

The monitoring parameters available for the Liquid Ring Compressors will be more robust and provide more on-line indication of changes in flare gas quality. This enhanced monitoring will likely assist in the optimization of compressor on-line performance.

On-line diagnostic tools are utilized to monitor flows to the flare in order to minimize flaring duration. See Section 3.1 "Operational Improvement – Monitoring" for more details on how these tools reduce flaring.

When higher than normal flare gas recovery compressor loads are detected announcements are made throughout the refinery in order to proactively identify and address the source of gases. See Section 3.1 Emergency Operating Procedure EOP-1 "Guidelines for Standard Public Address System Announcements" for more details.

Fuel Gas Scrubbing

Gases collected by the flare gas compressor are scrubbed whenever possible. This includes periods of fuel gas imbalance and periods when the compressor capacity is exceeded but the compressor is still operational. This results in reduced sulfur dioxide emissions from the flare.

Sulfur Recovery Units (U235, 236, & 238)

The refinery has three sulfur recovery units operating in parallel. During periods of maintenance the load is shifted from one unit to the others. Thus, no flaring is necessary during unit startups or shutdowns. Additionally, sulfur load can readily be reduced by decreasing sour water stripping. The Refinery has not historically experienced acid gas flaring during sulfur plant startups & shutdowns or upsets.

General Measures (used at various units, as applicable)

Liquid Vessel Cleanup

Chemical cleaning is used to so that cleanup is faster, minimizing the time needed for steam out. Chemical cleaning works similar to using dish soap on greasy dishes in that cleaning time and rinse water is minimized. Thus, in practice overall time in which steaming must occur is minimized, thus minimizing flaring. Chemical cleaning is primarily used in units where there is a high volume of residual oil and solids in equipment and piping. Chemical cleaning must be balanced with wastewater treatment plant capabilities.

Depressurization

Separate flare gas headers are in place at the Unicracker Complex for the Reactor section and Hydrogen Plant so that some gases produced during maintenance, startup, and shutdown can be directly routed to the flare. This minimizes the volume of gases sent to the flare during maintenance activities since it provides a separate system from the refinery blowdown system. This allows a portion of the refinery gasses to be recovered while only those from the Unicracker are sent to the flare.

Pressure Relief

Routine maintenance of PRDs, consistent with API 510, is used to minimize "routine" flow to the flare gas header. The purpose of the maintenance is to ensure the PRDs are operating properly at the appropriate set points and not relieving prior to the intended set point. Proper operation of PRDs provides a safe operation, reduces the base load and allows the system to better able to handle flow peaks during maintenance or other periods where there is additional flow in the blowdown system.

Source Reduction

If there are indications of increased base load to the flare gas compressor efforts are taken to identify and mitigate or minimize the source of gasses. This is done by identifying the flare header affected by use of monitoring parameters, as available, such as flare header flow meters, pressure and temperature indicators.

Shutdown/Startup Planning & Scheduling

A specific plan will be developed to minimize flaring during each turnaround, as each is unique. Specific actions depend on which parts of the unit are being brought down and which other units are down at the same time. Note: Historically this has taken place for major turnarounds, this will be expanded to minor turnarounds as well.

Specific "flare planning" has been conducted in respect to major turnarounds.

Plans have been prepared to insure there will be a viable fuel balance during each time period during the shutdown.

The length of the shutdown has been extended in some cases to allow equipment to be purged at lower rates that can be handled by the flare gas recovery system. Extension of shutdown length will be considered as part of the turnaround planning procedure referenced in Section 2. There are limitations to this activity. The safest operating condition for a unit is either when it is out of service or when it is running at normal conditions. The transition period, which occurs during startup and shutdown, requires special attention and procedures. Equipment placed under these conditions experience temperature and pressure changes during the transition period which can result in hydrocarbon loss. Due to these factors it is necessary to minimize the duration of transition periods.

Rate Reductions and Unit Shutdowns at interrelated units occur to balance inventory. This will be included as part of the T/A Planning Procedure process referenced in Section 2. The implications of shutting down a unit must be examined for each case. For example, shutting down additional units may result in more fuel gas imbalance (i.e. production of more gas then can be consumed). The refinery units are interrelated so shutting down one or two units will result in impacts to other units. In some cases a number of units must be shutdown in association with a particular unit. In order to properly shutdown units they must be depressured and purged. This typically results in flaring. So, the shutdown of associated units doesn't reduce flaring in all cases and must be evaluated for the overall benefit on a case by case basis.

Rate reduction is typically only of potential value if refinery is out of fuel gas balance. Again, the big picture needs to be examined. Some units may be an overall fuel consumer so reducing rate may not be helpful. The benefits need to be examined on a case by case basis.

Load shed planning is used to keep the fuel gas system in balance as units come up/down. Following the turnaround, any flaring that did occur is reviewed and a list of lessons learned is developed in order to minimize flaring during future turnaround events. Note: This is a minimization effort that is being instituted in a more rigorous manner as part of this FMP. This consistently applied review will help establish successful flare minimization practices that can be utilized in the future.

Shutdown activities are staged to keep the rate to the flare gas compressor low. This will be considered on a case by case basis as part of the turnaround planning procedure referenced in Section 2 which addresses flare minimization.

Turnarounds are scheduled so as to bring some units down every year, so that not all units are down at any one time.

Turnarounds are scheduled to minimize downtime associated with the unit and to provide a window for conducting preventative maintenance in order to promote equipment reliability. Conducting turnarounds on a regular basis prevents unplanned shutdowns that can lead to long periods of flaring if the necessary equipment is not available to quickly remedy a failure.

The duration between turnarounds is being extended over time as technology improves in order to minimize production impacts. This also results in minimizing flaring over long periods of time (i.e. 5 – 10 year windows). The reason this reduces flaring is that the number of turnarounds in a 10 year period is reduced if the duration between turnarounds is extended. Eliminating one or two

turnarounds in a 10 year period will eliminate the flaring associated with the startup and shutdown activities. The duration between turnarounds is being extended due to improvements such as longer catalyst life, better unit monitoring, better metallurgy, enhanced inspection technology and procedures.

Shutdown and Startup Execution

Equipment is purged slowly to avoid overloading flare gas recovery system capacity. The minimum purge rate that can be achieved is limited by the need to prepare the equipment for maintenance. This will be evaluated as part of the turnaround planning procedure referenced in Section 2.

Cleanup activities are cascaded so that large amounts of nitrogen are not routed to the flare at any one time. If all equipment was purged with nitrogen simultaneously this would likely overwhelm the flare gas recovery compressor. By cascading the purging, this allows the flare gas recovery compressor to recovery gasses to blowdown during a longer period of time, thus minimizing overall flaring since the compressor has been kept on-line for a longer period of time.

Steam is used instead of nitrogen for equipment clearing, as much of the steam condenses reducing the load on the flare recovery system. Steam is typically used in cases where there are not equipment vacuum limitations (e.g. piping, small equipment). Vessels typically have vacuum limitations. During steamout the peak flow to the flare gas recovery system is minimized by monitoring the steam rate and cutting back if the rate is too high. This does not eliminate all flaring associated with steamout procedures but minimizes the total amount of flaring.

The molecular weight of the flare gas is monitored, so that it is diverted away from the flare gas compressor when approaching outside of parameters that it can handle or that is suitable for combustion in unit heaters and boilers. This minimizes flaring by optimizing the period in which the compressor is on-line while also protecting the compressor from an equipment failure. Feed and product compressors are used to recycle material during startup until product specifications are met, allowing flaring to be avoided. The alternative would be to send gasses that have run once-through the reactors directly to blowdown. This minimizes the load to the flare gas recovery system and eliminates the potential for flaring.

Communication Measures

There is coordination from operator to operator and coordination within the shift organization so that the flare gas compressor load is not exceeded. The operators call to check on compressor operation before initiating actions that increase vent load.

Fuel Gas Balance

The fuel balance is adjusted to avoid flaring. This is done by examining the fuel gas balance which contains fuel producers and consumers. Depending on the environmental, safety and process constraints, operational changes are made dependent on which units have the most impact to the balance and the most flexibility. Reductions in fuel consumption or increases in consumption are attempted at numerous locations in order to get the facility back into fuel gas balance.

Steps taken to prevent fuel gas imbalances include and are generally included in the order of potential impact are:

- Minimize or cease butane vaporization to fuel gas.
- Increasing fuel consumption at operating heaters.
- Increasing production (i.e. fuel consumption) at Co-Generation plant.
- Operating steam turbines rather than electric drivers for pumps and compressors.
- Adjust the fuel supply at the Co-Generation plant to back out purchased natural gas and use more refinery fuel gas.
- Adjusting the severity of unit operations to affect the rate of gas production.

- Reducing process unit rates to decrease fuel gas generation.

The Refinery is also reviewing an application of a permit modification to address the short term SO_2 limit at the Co-Generation plant that restricts fuels gas consumption. Removing that restrictive limit will significantly reduce flaring from a fuel gas imbalance.

If a fuel gas imbalance does occur gasses are typically scrubbed for hydrogen sulfide removal. Excess clean gasses are then flared while additional measures are taken to mitigate the imbalance.

Reliability

The reliabilities of ancillary systems which can lead to flaring if they trip have been improved, reducing flaring. See the "Maintenance Excellence Philosophy" portion of Section 4.3.2.1 for more details of the facilities reliability practices.

Incident investigations, as further described in Section 3.1 and 3.2, are utilized to determine root cause of failures and determine appropriate corrective actions to prevent recurrence.

Maintenance is conducted on compressors based on critical monitoring (i.e. vibration, temperature, load) results.

Preventative maintenance is conducted on critical pieces of equipment (pumps, compressors, etc) throughout the refinery to prevent failures. The benefits described for Flare Gas Recovery Compressors in Section 3.2, preventative maintenance conducted on critical equipment serves a similar purpose. Planned maintenance prevents failures. Equipment failures can often lead to flaring if a unit experiences an upset or must be shutdown. By conducting preventative maintenance, failures can be prevented which reduces flaring.

4.1.3 Turnaround and Maintenance Flare Minimization Planning Tool

A planning tool has been developed and will be used to minimize flaring associated with planned turnaround and maintenance events, incorporating the minimization concepts outlined above. The means in which it will be utilized is presented in Attachment F. Listed below is an overview of the elements contained in the procedure:

- Establishing a timeline for conducting the initial evaluation of when flaring may occur prior to the turnaround;
- Scoping of the flaring that is expected to occur;
- Checklist which has a list of elements which should be considered in respect to flare minimization techniques;
- Post turnaround review of flaring which occurred.
- Documentation of lessons learned during the turnaround & successful minimization techniques utilized.
- Incorporation of lessons learned into appropriate shutdown, operating procedures, facility documents.

This process will minimize flaring by requiring more planning to address flaring that may occur during a unit shutdown and turnaround. It will also cause personnel associated with turnaround activities to develop means to alter their work in order to take action to minimize flaring. Lessons learned will be captured and used for future turnarounds in order to continue efforts to minimize and/or eliminate flaring. See Section 3 **Turnaround Planning Flare Minimization Procedure** discussion for more detail.

4.1.4 Measures to Minimize Flaring During Unplanned Maintenance

There are occasions, primarily as a result of equipment malfunction, where a relatively immediate decision is made to shut down a block of the refinery, typically within a period of hours, allowing very little time for specific planning. In these cases, although the maintenance planning tool can still be used, it is often not possible to make the adjustments necessary to minimize flaring to the same extent as is possible when the shutdown is planned in advance. Despite this, there are many actions that can be taken to minimize flaring even when there is very little advance notice. For these cases, the refinery utilizes general procedures that have been developed to minimize flaring during all maintenance events, as shown in the attached flowchart. Although there is less of an opportunity for scheduling turnaround activities so as to insure that there will be a home for all of the gas generated at each step of the process, many of the same general principles apply when the decision to bring the unit down is immediate.

4.2 Gas Quality/Quantity Issues for Each Flare (401.4.2)

This section discusses when flaring is likely to occur due to gas quality/quantity issues, systems for recovery of vent gas, and options for recovery, treatment and use of flare gas in accordance with 401.4.2

4.2.1 When Flaring is Likely to Occur

Releases of vent gas to the flare result from an imbalance between the quantity of vent gas produced by the refinery and the rate at which it can be compressed, treated to remove contaminants (sulfur compounds) and utilized as fuel gas. Situations that can lead to flaring can be grouped together based on similarity of cause. These general categories, including specific examples of events which fit into each category, are outlined and discussed below as required by 401.4.2 in respect to flaring that may reasonably be expected to occur due to issues of gas quantity and quality:

4.2.1.1 Maintenance, Turnaround, Startup, and Shutdown

Generally, in order to maintain either an individual equipment item or a block of refinery equipment, it is necessary to remove it from operation and clear it of process fluids. Examples include:

- Unit shutdown
- Working on equipment
- Catalyst change
- Plant leak repairs
- Compressor system repairs (planned and unplanned)
- Unit Startup

<u>Fuel and Hydrogen Gas Balance</u>

All of these activities of necessity impact refinery operations in a variety of ways. In order to minimize the risk of flaring, there must, at all times, be a balance between producers and consumers of fuel gas. When either a block of equipment or an individual equipment item is removed from service, if it either produces or consumes gases, then the balance of the fuel gas system is changed and adjustments are necessary to bring the system back into balance. If the net change in gas production/consumption is large and adjustments in the rate at which gas is produced/consumed by other units cannot be made quickly enough, then flaring results.

Flaring also occurs during Hydrogen Plant startups, shutdowns, or when a downstream hydrogen user experiences a sudden outage. As previously described, flare gas recovery compressors cannot operate with high volumes of hydrogen in the system without sustaining damage. When a hydrogen plant has been shutdown it typically is shutdown with a hydrogen consumer. In order to properly startup the consumer unit the hydrogen must first be available. Therefore, hydrogen plants are started up initially and may not have an outlet for all the hydrogen being produced. If a vent is not available, the hydrogen is sent to the flare gas recovery system if the system can handle minor volumes, otherwise it is sent to the flare. Hydrogen is also utilized for downstream equipment sweeping, thus the hydrogen plant is typically shutdown after the downstream unit. Thus, for similar reasons to startup there can be hydrogen containing streams sent to the flare system. If a hydrogen consumer suddenly shuts down, in order to minimize overall facility impacts, the hydrogen plant is typically kept running, rates may be reduced, but excess hydrogen flared until the downstream unit is restarted. Specific examples of this effect and fuel gas balance issues are listed below:

- Fewer locations that can accept the gas due to equipment/units out of service
- Hydrogen plant startup/shutdown
    - Including Excess Hydrogen production following startup or unit shutdown
    - Temporary flaring of off-spec hydrogen during startup
    - Planned & Unplanned shutdowns can result in flaring
    - Planned & Unplanned shutdowns of the third party plant can result in flaring.
- Unicracker Complex turnaround (i.e. numerous combustion devices shutdown)

Equipment Preparation for Maintenance

Additionally, in order to clear hydrocarbons from equipment in a safe and orderly fashion so as to allow it to be maintained, a variety of procedures must be used. Many of these necessary procedures result in changes in the quantity and quality of fuel gas produced. For example:

- Depressurization of equipment
- Pressurization of equipment with nitrogen to remove hydrocarbon resulting in low fuel value (high nitrogen content) gas which cannot be used with burners designed for "normal" fuel gas, as there can be NOx production and flameout concerns with low Btu gas.
- Steaming provides an efficient means for removing hydrocarbon clingage from equipment but the effects of steam (high temperature, condensation production) can result in the need to shutdown flare gas recovery compressors.

See the "Refinery Maintenance and Turnaround Activities" section for more details in regards to the reasons for flaring during equipment preparation for maintenance.

Preventative Maintenance, On-Line Planned Maintenance, Equipment Upgrades, Changes

In order to prevent unplanned failures preventative maintenance (PM) is conducted at varying schedules. Typically, PM is conducted to minimize production and/or environmental impacts by grouping PM activities together. Additionally, equipment upgrades occur periodically or changes may be made to improve existing systems. During equipment upgrades/changes pieces of equipment may be required to be taken out of service for brief periods of time to ensure worker safety and/or allow for equipment access.

Flare Gas Recovery Compressor Maintenance –

Major Maintenance - typically conducted in conjunction with the Unicracker Complex turnaround in order to minimize environmental impact (i.e. less gas being produced while the Unicracker Complex is shutdown). The purpose of the PM is to maintain the compressor in order to minimize unplanned failures. This results in better on-line efficiency. Unplanned failures typically require more downtime due to time needed to diagnose the failure and then acquiring the necessary parts to make repairs.

Minor Maintenance – Based on on-going monitoring conducted on the compressor, see Recurring Failure section for more details, minor maintenance is conducted to replace parts or equipment which may fail or is not operating per the design. Purpose of the maintenance is to minimize and control downtime by preventing an unplanned, uncontrolled failure which may result in increased downtime. Additionally, the maintenance also can restore the compressor capacity and prevent flaring if the compressor is not functioning up to the equipment design.

Refinery Relief and Blowdown System Maintenance – Periodic maintenance is required on sections of the relief and blowdown systems (e.g. process vessels, drums, flare water seals, flare tips, etc.). This maintenance can include periodic, required metallurgical equipment inspections as well as preventative maintenance cleaning and replacement of components. These activities are required to prevent unplanned shutdowns which might incur long repair periods of not performed proactively.

Miscellaneous PM, Equipment Upgrades, Changes

Flare Gas Recovery System Maintenance - Construction tie-ins to the flare system, instrument changes, electrical upgrades, new equipment installations could require equipment

to be taken out of service. This might result in flaring in order to isolate equipment and then also during equipment startup.

Equipment Upgrades / Changes - are made periodically to improve existing systems. This may require various pieces of equipment to be temporarily taken out of service. Portions of operating units or individual pieces of equipment may be taken off line for preventative maintenance or repairs. This can result in flaring during the clearing of equipment and flaring when equipment is put back in service.

On-Line Maintenance - Water washing of U244 D-506 and U231 D-105 Reformate Stabilizer is conducted periodically. The procedure is managed in order to minimize loading to the flare gas recovery system but there are periods when flaring may occur during this procedure.

4.2.1.2 High Base/Continuous Load

Although flaring is often the result of a sudden, short-term imbalance in the flare/fuel gas system, it is made more likely when the gap between the capacity of the flare gas recovery system and long term average flow to the flare header is reduced. Examples of base load to the flare header include:

- Leakage of relief valves
- Low pressure equipment vented to flare header, e.g. tower overhead systems
- Delayed coker depressurization
- Low pressure tankage or odor sources vented to flare header via blower or compressor
- Hydrocrackers and reformers at end of run with elevated gas production rates
- Accumulation of small actions each of which results in production of flare gas
- Seasonal issues with cooling water temperature resulting in increased rates to flare header
- Temporary re-rerouting of gases from other systems such as odor abatement to fuel gas recovery in order to prevent system overpressure.
- Feed quality issue resulting in temporary increased base load.

In cases of this type of flaring when the flare gas compressor is still operating the gasses recovered by the compressor will continue to be scrubbed for hydrogen sulfide removal at Unit 233.

4.2.1.3 Reduced Consumption of Fuel Gas

Treated flare gas may be flared during supply/demand imbalance. If flaring is to be minimized, it is necessary to balance fuel gas producers and consumers in the refinery. Refinery modifications that can change the fuel gas balance so as to make flaring more likely include:

- Energy efficiency projects that reduce fuel gas consumption
- Fuel gas imbalances can occur when fuel consumers (e.g. heaters, turbines) are shutdown and more gas is being produced then can be consumed.
- Fuel gas imbalances can occur when the third party Hydrogen Plant conducts planned or unplanned maintenance on feed filters and knock out drums.

4.2.1.4 Upset/Malfunction

An imbalance in the flare gas system can also result from any of a series of upsets or equipment malfunctions that either increase the volume of flare gas produced or decrease the ability of the fuel gas handling system to accommodate it. Examples include:

- Leaking relief valves, PRV malfunction
- Relieving relief valves
- Equipment plugging
- Loss of a major compressor (e.g. Wet gas compressor)
- Loss of flare gas compressors, including but not limited to:
    - Reciprocating compressor seats overheating from high nitrogen or hydrogen content

  - Fuel gas with low specific gravity (due to Hydrogen), or high heat of compression resulting in overheating
  - High inlet temperature to flare gas compressor
  - Monitored safety/protective parameter (e.g. vibration) triggered shutdown.
  - General mechanical problems inherent in the operation of rotating equipment.
  - High liquid level.
  - Equipment failure resulting in loss of compressor efficiency.
- Loss of other compressors (e.g. odor abatement, recycle hydrogen)
- Loss of a utility (steam, air, cooling water, power)
- Loss of air fins or condensers
- Failure of instrumentation, valve, pump, compressor, etc. to function as designed.
- Fuel quality upsets
- Hydrogen plant Pressure Swing Adsorption (PSA) operational changes (e.g. switching from 10 bed to 8 bed operation).
- Hydrogen plant PSA valve leaks resulting in a unit upset.
- Hydrogen may be sent to the flare system when there is a supply/demand imbalance.
- Unplanned/sudden shutdown of 3rd party Hydrogen Plant.
- Equipment failure which results in an immediate or controlled unit shutdown (e.g. charge pump failure)
- Feed quality issue resulting in unit upset. (e.g. wet feed, lighter than typical feed)
- Control system failures resulting in either unit shutdowns or unit not operating as efficiently in manual operating mode.
- The unit Hazard and Operability (HAZOP) studies contain more specific listings of potential causes of equipment malfunctions and upsets which may lead to flaring.

4.2.1.5 Emergencies

Equipment failures and operational issues that result in equipment overpressure, typically leading to relief valves opening to the flare system, are classed as emergencies. Emergency flaring events are severe instances of upsets or malfunction. Emergencies are further defined in BAAQMD 12-12.

- Line leak, fires due to leaking flanges, etc. can result in emergency unit shutdowns in which material from units is quickly sent to the flare.
- Unit Hazards and Operability Studies (HAZOPs) and Process Hazards Analysis (PHA) also reference emergency conditions which may lead to flaring. These studies are a systematic evaluation of the hazards involved in the process. PHAs are required for initiation of a process, for major equipment/operating changes, and at least once every five years after that. One of the values of PHA's is to identify potential hazardous and develop means for mitigating hazards before they occur. For example, one of the ways to conduct this evaluation is to take unit piping and instrument diagram (P&ID). The consequences of failure of pieces of equipment (e.g. on a pump if flow is lost, flow is increased, flow is decreased) are discussed and the mitigation in place is reviewed. Where improvements should be made they are identified and tracked to completion. See Section 4.3.2.1 for more details about PHAs.

4.2.1.6 Miscellaneous

- Undetermined Cause - in some cases the cause of flaring cannot be determined. Typically, this is during minor flaring events (<500,000 scfd). Systems have been setup to try and pinpoint the cause of all flaring events, most events are traced back to a source but there are instances when a direct cause cannot be determined.

- Natural Gas Purge – flaring can occur if there is a spike in the natural gas purge flow. One of the ways this may occur is if the natural gas purge valve is opened too quickly or at a rate greater than typical flow. This results in the brief flaring of excess purge gas.
- False Flow Meter Reading – as previously described to BAAQMD, many parameters (e.g. water seal level, flare line pressure, flare tip cameras) are utilized to determine whether or not flaring has actually occurred. In some cases flow may be detected by the meter, for example due to thermal expansion, but not all other parameters indicate that flaring has occurred. This is a common issue due to the sensitivity of the ultrasonic flow meters.

4.2.1.7 Other Causes

There are many potential causes of flaring, some of which are exceedingly difficult to totally eliminate, despite careful planning and system design.

4.2.2 Vent Gas Recovery Systems

As required by 401.4.2 the following sections contain an audit of the vent gas recovery, storage, and treatment capacity. In addition, an evaluation for installing additional recovery, storage, or treatment equipment to recover portions of gases periodically sent to the flare.

Refinery unit operations both produce and consume light hydrocarbons. Most of these hydrocarbons are routed directly from one refinery process unit to another. Refineries are constructed with a network of flare headers running throughout each of the process units in order to allow collection and safe handling of any hydrocarbon vapors that cannot be routed directly to another process unit. The hydrocarbon vapors are collected at low pressures in these flare headers. These gases are recovered for reuse by increasing their pressure using a flare gas compressor system. The compressed gases are typically returned to the refinery fuel gas system for use in fired equipment within the refinery. Any gas not compressed and sent to the fuel gas system is routed to a flare so it can be disposed of safely by combustion under controlled conditions. A typical flare gas system is shown in:

See Attachment G. In order to recover flare gas for use in the fuel gas system, three criteria must be met. First, there must be sufficient flare gas compressor capacity. Second, there must be sufficient gas treating capacity. Finally there must either be available storage volume or a user (e.g. fired heater) with a need for the gas. If any of these conditions are not met, then the gas cannot be recovered into the fuel gas header.

Existing Systems for Vent Gas Recovery

Within the Phillips 66 San Francisco Refinery at Rodeo, CA, the systems that currently exist for recovery of vent gas are described by the table below.

Flare System	Vent Gas Recovery Capacity (MM scfd)	Storage Capacity (MM scf)	Scrubbing Capacity for Vent Gas (MM scfd)	Total Gas Scrubbing Capacity (MM scfd)
Main Flare & MP30 Flare	4.75	None	None	35 [1]

[1] *The facility does not have a scrubber for gases sent directly to the flare. The flare gas recovery system typically sends gases to U233 for H_2S removal and then sends these gases to fired sources. The capacity listed above includes the total capacity of the scrubbing system.*

The Phillips 66, San Francisco Refinery vent gas recovery system does not include any dedicated capacity for storage of fuel gas or vent gas. However, on a continuous basis the refinery optimizes the refinery fuel gas system of producers and consumers to maximize the capacity available for treatment and reuse of recovered gases by employing the following strategies:

- adjusting the sources of fuel that are made up to the fuel gas system including imported natural gas, and butane;
- adjusting the operations of units that produce fuel gas range materials including at times reducing severity of operations to reduce fuel gas production if it would put the refinery in a flaring situation;
- adjusting the refinery profile for consumption of fuel gas by ensuring the cogeneration unit is at its maximum capacity (within constraints on exporting power), shifting rotating equipment to turbine drivers (which operate with steam generated in the fuel gas fired boilers), and at times reducing the throughput of processing units to minimize gas production. There are limitations to this activity. For example, the cogeneration unit has a sulfur dioxide (lb/hr) limit. The cogeneration unit utilizes a fuel mixture of refinery fuel gas (sulfur containing) and natural gas (nearly nil sulfur). As the ratio of refinery fuel gas is increased the units start approaching their sulfur dioxide limits. The amount of fuel gas burned in facility heaters is limited by permit conditions and energy efficiency constraints.
- When possible, the usage of fuel gas can be increased for brief periods of time to mitigate or prevent flaring.

4.2.2.1 Options for Recovery, Treatment and Use

To address the requirements of Regulation 12 Rule 12 (401.4), the Phillips 66, San Francisco refinery at Rodeo, CA has considered the feasibility of further reducing flaring through additional recovery, treatment, and/or storage of flare header gases, or to use the recovered gases through other means. This evaluation considers the impact these additional systems would have on the volume of flared gases remaining in excess of what has already been recovered (as noted in the previous section), and the associated mass flow of hydrocarbons emitted after combustion in the flare control device.

A typical flare header is connected to both a flare gas recovery system and to one or more flares. Normally all vapor flow to the flare header is recovered by a flare gas recovery compressor, which increases the pressure of the flare gas allowing it to be routed to a gas treater for removal of contaminants such as sulfur and then to the refinery fuel gas system. Gas in excess of what can be handled by the flare gas recovery compressor(s), the treater(s), and/or the fuel gas system end users flows to a refinery flare so it can be safely disposed of by combustion. Therefore, in order to reduce the volume of gas flared, three essential infrastructure elements are required: sufficient compressor capacity to increase the pressure of the gas to the point where it can be used in the refinery fuel system, sufficient storage volume to dampen out the variation in volumetric flowrate to the flare gas header, and sufficient capacity in treating systems to condition the gas (primarily by removal of sulfur) for use in the fuel gas system.

Options for storage of flare gas are analogous to those for storage of other process gases. Gases can be stored at low pressure in expandable gas-holders with either liquid (water) or dry (fabric diaphragm) seals. The volumes of these systems expand and contract as gas is added or removed from the container. Very large vessels, containing up to 10,000,000 cubic feet of gas can be constructed by using multiple “lifts”, or stages. Gases can also be stored at higher pressures, and correspondingly lower volumes, in steel bullets or spheres. The optimal pressure vessel configuration depends on system design pressure and total required storage volume.

For any type of gas storage facility, selection of an acceptable site and obtaining the permits necessary for construction both present difficulties. Despite the refinery’s demonstrated commitment and strong track record with respect to safe handling of hazardous materials, the surrounding community can be expected to have concerns about any plan to store large volumes of flammable gas containing hydrogen sulfide and other sulfur compounds. Safety concerns are expected to impact site selection as well, with a relatively remote location preferred. Modifications to the recovery, storage and treating of refinery flare gases are subject to the provisions and approval of federal and local regulations including Process Safety Management (PSM), Contra Costa County Industrial Safety Ordinance (ISO), and California Accidental Release Prevention Program (CalARP). Although the objective of the project would be a reduction in flaring, there are expected to be multiple hurdles along the path to a construction/land use permit.

Flare gas treating is used to condition flare gas for use as fuel in the refinery fuel gas system. Treatment is focused on removal of sulfur compounds, with some systems improving fuel value by removing carbon dioxide as well. A range of technology options exist, most of which are based on absorption of acid gases into a “lean” amine solution (MEA, DEA, MDEA, DGA) with regeneration of the resulting “rich” solution by stripping at lower pressure. In order to recover additional fuel gas it is necessary to have sufficient capacity to match the capacity of gas treating systems to the peak flowrate of the flare gas requiring treatment.

In order to assess the potential effect of additional flare gas recovery, a hypothetical design for an upgraded system was developed. The impact that this system would be expected to have on hydrocarbon emissions, based on the refinery’s recent flaring history, was then evaluated. Results of this evaluation are provided for three system capacities corresponding to the rate of flow of additional flared gases that could be recovered, the modifications required to achieve that recovery, and the estimated total installed cost for the additional equipment needed for the increase in recovery. The budgetary level (order of magnitude) cost information provided in this section has been developed based on total installed cost data from similar installations where available, otherwise vendor quotes in combination with standard industry cost estimation procedures have been used to estimate system cost.

An evaluation was conducted for the Phillips 66, San Francisco Refinery in Rodeo, CA. In order to conduct the analysis a summary of historical flaring was prepared. Flaring events were categorized in order to determine feasible means for reducing flaring through storage, recovery, and treatment. See Attachment H for summary of categorized, historical flaring. The period of 2004 – 2006 was utilized to determine general trends. The data for 2005 was utilized to quantify potential costs and benefits of additional storage, recovery, and/or treatment.

Based on the data review it was determined that four cases should be examined. The cases include the following scenarios:

- Case 1 – Installation of Small Compressor (1.5 MMSCF/day) to enhance existing compressor recovery during peak loading.
- Case 2 – Installation of Large Compressor (6.0 MMSCF/day) to eliminate minor compressor loading events and some flaring events which occur during brief Flare Gas Recovery Compressor (G-503) preventative maintenance periods.
- Case 3 – Installation of high pressure storage sphere, installation of large compressor, and addition of amine treater. Value of this case would be to eliminate all events listed in Case 2 as well as some events which are quality driven (e.g. high Nitrogen & Hydrogen) due to equipment purging.
- Case 4 – Similar to Case 3 with a higher percentage of the volume generated during the quality driven flaring events would be eliminated.

See Attachment I for example schematic of the equipment installations that would be involved in Case 3 and 4.

Listed below is a summary of the overview of the analysis performed and the results of the analysis.

Storage, Treatment, & Recovery Scenario - Emission Reduction & Cost Effective Analysis									
	Estimated Potential Reductions (tons/yr)					Cost Effective Basis (tons)	Cost of Control ($MM)	Annualized Cost of Abatement System ($MM)	Cost Effectiveness Basis ($/ton)
Case	VOC	SO2	Nox	CO	PM				
1	-0.15	-0.62	-0.02	-0.19	*negligible*	-0.98	$ 3.25	$ 1.06	$ (1,084,092)
2	-1.12	-4.51	-0.13	-1.38	-0.01	-7.16	$ 7.50	$ 2.51	$ (350,420)
3	-1.57	-6.35	-0.19	-1.94	-0.02	-10.07	$ 23.40	$ 6.19	$ (615,476)
4	-2.02	-8.18	-0.24	-2.51	-0.02	-12.97	$ 23.40	$ 6.19	$ (477,509)

[1] Basis is BAAQMD Guidelines for calculation of cost-effectiveness for BACT using the "levilized cash flow method". Costs for equipment were based on cost curves developed by a third-party.

It should be noted that the cost basis did not include the consideration of infrastructure adequacy and did not include all potential equipment and instrumentation necessary. It is expected that once a more rigorous evaluation is performed the costs will significantly be impacted. For example, the cost of infrastructure needs for equipment utilizing electricity and air is expected to be significant. Attachment N contains data utilized to calculate the cost effectiveness of the four cases described above. The storage sphere costs were based on quotes provided by Chicago Bridge and Iron and are contained in the Attachment. A cost curve was prepared by a third-party for the compressor costs. The costs were based on data points of actual costs provided by WSPA membership.

For Case 3 and 4, the evaluation is based on the need for installation of new major systems in order to increase recovery of flare gases from current levels:

- Additional flare gas recovery compressor capacity - the estimated cost to provide additional compressor capacity to recover vent gas flowing in the flare header in excess of current compressor capacity, for transfer to storage and / or treatment. Costs provided are for one unspared compressor system to be added to one existing flare header. The estimate is for a reciprocating compressor with

all necessary appurtenances for operation, including knock out pots, coolers, and instrumentation for a fully functional system.

- Addition of surge volume storage capacity – the estimated cost to provide temporary surge storage for a portion of the gases routed to the flare header in excess of the volumes currently being recovered, treated, and consumed. The addition of temporary surge storage volume is necessary for any further increase in flare gas recovery to allow flare gas flow (which is highly variable) to be matched to the demand for fuel gas. The cost used is based on a storage volume equal to the total volume of gas accumulated over one day, and is based on recovery in a high pressure sphere system with discharge at a controlled rate back to the flare gas header. Other lower pressure approaches were considered (low pressure gas holder, medium pressure sphere), but for the sizes analyzed a high pressure sphere was identified as the preferred approach based on operational, safety and economic considerations.
- Additional recovered gas treatment capacity – the cost of additional amine-based treating capacity to process recovered gases for sulfur removal so that they can be burned by existing fuel gas consumers without exceeding environmental or equipment operational limits. The assumption is that for small increases in treating capacity the existing treater(s) will be modified / upgraded to allow for the increase. No additional cost has been included for expansion of sulfur recovery system capacity.

Based on this review the Phillips 66, San Francisco Refinery has concluded that further expansion of systems for the recovery, treatment and use of flared gases is not the most effective approach to reducing these emissions. The refinery has concluded that the major source of flared gases on a volume basis can be attributed to large flow rate, low quality flaring events, especially those of extended duration such as may occur during emergency events or prolonged shutdowns where systems within the refinery are out of fuel gas (and / or hydrogen) balance.

The refinery has allocated significant resources to the development of procedures to plan for, manage, and minimize large flow and duration flaring events. Further resources have also been allocated effectively to ongoing preventive maintenance programs, and even to adjust refinery operations on a severity and throughput basis. These approaches have been identified to be more effective than providing additional flare gas recovery system capacity. Additionally, it is expected that the practices discussed in this plan, specifically the development of a formal turnaround flare management procedure, continuation of incident investigations, and management system programs will result in further reductions of flaring events. These will likely prove to be most cost effective and meaningful.

4.2.2.2 Preventing Production of Low-Quality Flare Gas

Measures to help prevent production of low-quality flare gas, e.g. sour gas, low Btu gas, high nitrogen content are further investigated in this section. The discussion is integrated with the discussion of turnaround and maintenance events as gas quantity (insufficient demand) and gas quality (unscrubbed during upset/malfunction and nitrogen/steam during turnaround) are the primary drivers for flaring during these events. It is for this reason that the measures used to minimize production of low quality fuel gas are closely related to those that can be applied to reduce flaring during maintenance and turnaround events.

Preventing production of sour flare gas is accomplished by making sure that recovered flare gas is routed to the fuel gas system via a gas treating system. It is preventing the production of sour fuel gas that drives the need to match the capacity of treating systems to accept flare gas to flare gas recovery capacity.

High fuel gas nitrogen levels are primarily caused by the nitrogen used to purge hydrocarbons from equipment in preparation for equipment opening. High nitrogen fuel gas content is controlled by limiting the rate at which nitrogen is introduced to equipment and ultimately the flare gas system during nitrogen purging operations. There can be a trade-off between nitrogen flowrate and the effectiveness with which the nitrogen mixes within the contents of the vessel from which hydrocarbons are being removed. These must be balanced on a case-by-case basis to determine the purge rate that represents the best compromise among competing process needs. Scheduling decommissioning activities to minimize overlapping nitrogen purge events is one of the best ways to control the nitrogen content of flare gas.

4.3 Recurrent failure (401.4.3)

- of Pollution Control Equipment
- Process Equipment, or
- A process to operate in a normal or usual manner:

4.3.1 Reportable Flaring Events Attributable to the Same Process or Equipment Item

For the Period from June 30, 2012 to June 30, 2019

A discussion and analysis of each event, including actions taken to avoid future flaring as a result of the same cause and the adequacy of maintenance schedules and protocols. Flaring as the result of malfunctions and upsets is included in the analysis. Attachment H contains a listing of the reportable events and the associated corrective actions.

Reportable Flaring Events Attributable to the Same Process or Equipment Item		
Date	**Process or Equipment Item**	**Actions Taken to Avoid Future Flaring**
1/18/12 3/26/12 9/30/14	Air Liquide removal of RFG A from process feed to change feed gas coalescer filter.	Third party Hydrogen Plant installed a tie in for potential future additional water filter. Temporary piping to blow down was added for the bleed at the low point in the RFG A gas line prior to going to Air Liquide. Phillips 66 communicated with Air Liquide regarding the filter replacements. Phillips 66 and Air Liquide discussed having better communication prior to Air Liquide conducting the filter replacements and notifying appropriate refinery personnel so that flaring can be minimized or eliminated. Since the incident on 9/30/14, Air Liquide has replaced the filters without another flaring RCA being triggered.
1/25 – 2/4/15 2/4 – 2/5/15 2/14/15	Equipment inappropriately sized or installed at Unit 246 G-802 Hydrogen Gas Recycle Compressor.	Replace 0.5 amp fuse with 2.0 amp fuse associated with the solenoid valve that maintains oil pressure on the G-802 trip and throttle valve (Gimpel valve). Review all other fuses associated with this control system and panel for proper sizing. Replace improperly sized fuses as necessary. Write a checklist procedure for dry gas seal installation on the U246 G-802 seals. Procedure should call out the appropriate seal drawing and require a craftsperson to mark each step as completed. This checklist will include all major components to install the seals including the socket head screws that were inadvertently omitted prior to the February 4th startup attempt. Conduct refresher training on Maintenance Procedure (MP) 2.53, *Safe Assembly of Tubing Connections Guideline,* with P66 and contractor instrument technicians, pipe fitters and machinists. Audit training records for those performing instrument tubing assembly per MP 2.53 requirements.

4.3.2 Means to Prevent Recurrent Failure

There are many programs in place in order to prevent recurrent failures. The programs fall into two major categories; proactive and reactive. The purpose of the proactive programs is to have systems in place based on potential failures that could occur in order to prevent failures from occurring. The reactive programs

examine failures that have occurred in order to learn from the failure and develop stronger proactive programs to prevent recurrence. The facility employs many levels of proactive and reactive programs.

4.3.2.1 Proactive Programs

BAAQMD Regulation references "the adequacy of existing maintenance schedules and protocols" for air pollution control and process equipment in respect to recurrent failures. There are major programs in place which support the prevention of failures. Additionally, these programs facilitate continuous improvement to prevent failures. Key programs in place are described below.

Phillips 66 HSE Management System

Phillips 66 Corporation requires each refinery to implement a standard Health, Safety, and Environmental (HSE) Management System. This is achieved through providing organization structure, programs, procedures, processes, and resources to manage business activities safely and with respect and care for the environment. The HSE Management System seeks to:

- Demonstrate management commitment to health, safety, & environmental stewardship.
- Ensure that all reasonably practicable steps are taken to identify the hazards and risks arising from business activities.
- Establish adequate control over business activities with the aim of achieving safe, incident, and injury free working conditions.
- Maximize the operational integrity, reliability, and efficiency.
- Ensure regulatory compliance.
- Promote high standards and the continuous improvement of HSE performance.

Process Safety Management (PSM)

The refinery must comply with EPA's PSM. Major elements of PSM are also incorporated in California's Accidental Release Prevention Program (CalARP), the Contra Costa County (CCC) Industrial Safety Ordinance (ISO) and EPA's Risk Management Program. There are fourteen elements of PSM, each of these elements is included in some fashion with the programs listed above. In addition, the CCC ISO and CAL ARP program have some additional elements. Although all the elements directly or indirectly prevent failures or minimize the impact of a failure if it occurs, listed below are some of the programs that most directly support failure prevention.

Employee Participation – Employees at all levels must be involved with the elements of PSM. This encourages ownership, participation and buy-in of incident investigation results and means for improvement, and promotes a better safety and operating culture.

Process Safety Information (PSI) **–** the refinery is required to maintain accurate Process Safety Information. PSI includes chemical inventory, accurate drawings, operating procedures, etc.

Process Hazards Analysis (PHA) **-** A PHA is a systematic evaluation of the hazards involved in the process. PHAs are required for initiation of a process and at least once every five years after that. The PHA team should be multi-disciplinary, including maintenance, operations, and engineering. The facilitator of the PHA must be trained in the methodology being used. For proper conduct of a PHA, the PSI must be as complete as possible. One of the values of PHA's is to identify potential hazardous and develop means for mitigating hazardous before they occur.

Operating Procedures **-** Operating procedures include not only the steps for normal operations, but for upset conditions, temporary operations, start-up, and shutdown. Very important safety information must also be included in operating procedures. Contained in the procedures are basic hazards of exceeding operational limits, appropriate response to upset conditions, safety and health information, and emergency operations. The procedures are required to be up to date and reliable. They are also a critical element in training of personnel.

Training **-** Training is required for all employees new to a process before they become involved in that process. The training must include the hazards of the chemicals and process and what is necessary to protect themselves, their fellow employees, and their surrounding communities. Training should be both written/classroom and hands-on. Employers must evaluate the effectiveness of training and make adjustments to content and frequency of training based on those evaluations.

Pre-Startup Safety Review (PSSR) **-** The Pre-Startup Safety Review is done before startup of a new operation or startup following a change in the process (see Management of Change, below). It is a means for ensuring that all essential action items and recommendations from the PHA have been completed prior to beginning operations. It is also the point at which the design parameters and standards used for construction are verified. If training or modifications to Process Safety Information (PSI) are necessary, completion of these items is also verified during the PSSR. Startup should not be allowed to occur until all safety-critical PSSR items have been completed.

Mechanical Integrity **-** Employers are required to have a program to ensure the integrity of processes and equipment. Aspects include listing applicable equipment, training of maintenance personnel, inspection and testing, and maintenance of such systems as controls, vessels, piping, safety systems, and emergency systems. Development and modifications to the mechanical integrity program should be made based on operational experience, relevant codes, and industry standards.

Management of Change (MOC) **-** "Change" includes anything that would require a change in Process Safety Information. This includes changes to equipment, processes, and instrumentation. A proper MOC system requires that any change be evaluated prior to its implementation. The level of evaluation can depend on the degree of change and its criticality to the safety of the operation. In addition to the evaluation and approval of a change, MOC requires that suitable training be conducted (if necessary) and the relevant PSI be updated.

Compliance Audits **-** Per OSHA, compliance audits must be conducted at least once every three years. The purpose of the audits is to determine whether the practices and procedures developed under the provisions of the PSM standard are being followed and are effective. The auditor(s) must be knowledgeable in PSM and should be impartial to the facility being audited. An audit report must be developed and the employer must promptly respond to each of the findings. Once deficiencies are corrected, the corrective action must also be documented.

Maintenance Excellence Philosophy

Predictive Maintenance - The Rodeo Refinery utilizes predictive maintenance tools for both rotating equipment (pumps, blowers, fans, motors) and fixed equipment (pressure vessels, piping, storage tanks). These tools can be used to predict equipment condition and failures so that appropriate preventive measures can be taken, or so repairs can be scheduled prior to a failure. The Rotating Equipment/Reliability Department is responsible for ensuring that rotating equipment is in good condition and the Metallurgical Engineering and Inspection (ME&I) department is responsible for inspecting fixed equipment in the facility.

ROTATING EQUIPMENT

The following is a list of tools and techniques used for maintaining the rotating equipment:

- Operator Inspections/Seal Integrity
- Equipment Deficiencies
- Vibration Analysis
- Lube Oil Testing
- Overhaul Testing

Operator Inspections / Seal Integrity

Operators visually inspect the equipment case and seal/packing area for signs of leakage. Mechanical seals are the number one failure mode in centrifugal pumps. Operations and maintenance personnel include visual monitoring of seals in their shift rounds. In some cases, for example where dual seals are installed, instrumentation (level, pressure, etc.) is available to alert operations that action is required. Seals subject to LDAR (Leak Detection and Repair) regulations are monitored for hydrocarbon emissions on a regular basis.

Operators listen to and observe the equipment operation to detect any unusual noises and/or vibrations that may indicate damage or wear.

Equipment Deficiencies

If a potential deficiency is observed, the operator contacts the Operations Supervisor to request consultation by the appropriate craft or by the Rotating Equipment Group. If it is determined that repair is required, the operator submits a Work Request via the Computerized Maintenance Management System and initiates the steps necessary to make the equipment available for repair. The Work Request documents the deficiencies noted during the operator inspection.

Vibration Analysis

Vibration analysis can be a useful predictive maintenance activity to identify potential equipment failures so that proper maintenance can be scheduled before a failure occurs.

Vibration readings are taken using hand-held piezoelectric accelerometers. Readings are normally taken on all bearing planes (horizontal, vertical, axial). Local panel readings for vibration and temperature, where applicable, are also entered into the data collector. The data is then typically uploaded into the vibration analysis computer, which can be compared to historical data, industry guidelines, or vendor data to assist in scheduling maintenance or

indicating the need for additional detailed analysis. Rodeo Refinery personnel participate on a Phillips 66 Rotating Equipment Best Practices Network to facilitate learning in this area.

Lube Oil Testing

Several pieces of rotating equipment are classified as critical. A sample of lube oil is drawn from the appropriate critical equipment, or other machinery of interest, quarterly or as warranted. This sample is sent to a certified laboratory for a standard set of analyses. The results are transmitted to the Machinery Specialist. The results of each analysis are entered into a computer database as a single record. The data included in the record are:

- Equipment tag number
- Date of sample
- Analysis results

Sample test results are trended and compared to established limits of operation for each specific piece of equipment. If a deficiency is noted, the Machinery Specialist initiates an appropriate corrective action. These could include continued monitoring, oil replacement, filtration, or a repair of the equipment.

Overhaul Inspections

Equipment that has been removed to the shop for repair undergoes a detailed internal inspection to identify wear or damage that could affect performance or mechanical integrity. Machinists perform visual inspections and measure clearances for comparison to manufacturer's specifications. If necessary, the Inspection Group can perform more sophisticated tests (radiographs, ultrasonic, magnetic particle, liquid penetrant and materials analysis) if requested by the Rotating Equipment Group or Maintenance.

FIXED EQUIPMENT

The Rodeo Refinery utilizes the following techniques to ensure fixed equipment is in good condition:

- External Visual Inspection,
- Internal Visual Inspections, and
- Thickness Surveys.

External Visual Inspection

The primary reasons for performing external visual inspections of pressure vessels, piping and storage tanks are to determine the type, rate and causes of any deterioration present that may negatively affect their mechanical integrity and/or service performance and to determine if any maintenance work is required to maintain the equipment in a safe operating condition.

External visual inspections are performed by qualified Phillips 66 or contract inspectors. The external visual inspection results are documented in an external inspection report. The report is completed and dated by the inspector(s) performing the external visual inspection. It is reviewed by the plant's Inspection Supervisor or authorized representative. The completed report is filed in the equipment inspection history file located in the plant's Inspection Department.

Internal Visual Inspection

The primary reasons for performing an internal visual inspection are:

1. to determine if the essential sections of the vessel are safe to operate until the next inspection;
2. to determine the type, rate and causes of any deterioration present which may negatively affect its mechanical integrity; and,

3. to determine if any maintenance work is required to maintain the pressure vessel in a safe operating condition.

The internal visual inspections are performed by qualified Phillips 66 or contract inspectors.

Pressure vessels are typically visually inspected internally at least once every 10 years, in accordance with API standards. Non-fired boilers are inspected every 6 years maximum and fired boilers are inspected every 3 years maximum, in accordance with State of California requirements. In practice, many vessels and heaters in sulfur plants are visually inspected internally during a boiler inspection period, at a 3, 6, or 9 year interval and therefore, well within the 10 year maximum interval allowed by API industry standards.

The inspection results are documented in an internal inspection report. The report is completed and dated by the inspector(s) performing the internal visual inspection. It is reviewed by the plant's Phillips 66 Inspection Supervisor or authorized representative. The completed report is filed in the equipment inspection history file located in the plant's Inspection Department.

Thickness Survey
A representative number of thickness measurements are taken on pressure vessels via ultrasonic and/or radiographic thickness techniques for remaining wall thickness at intervals pre-established by the industry. Thickness surveys are also performed on most process piping runs. The thickness survey is prompted by the plant's Inspection Department to meet all requirements for thickness surveys as outlined in the applicable API standard.

The thickness surveys are performed by qualified Phillips 66 or contract inspectors who have the appropriate education, experience and qualifications.

The general area of each thickness monitoring location (TML) is ultrasonically scanned and/or radiographed and the lowest reading is recorded. When using ultrasonics, scanning the general area rather than monitoring the same exact location increases the chance of finding local corrosion and typically yields a larger (more conservative) general corrosion rate.

The thickness survey results are completed and dated by the inspector(s) performing the thickness survey. It is reviewed by the Phillips 66 site Inspection Coordinator or authorized representative. The completed report is filed in the appropriate equipment file and all data is recorded in an electronic database (PCMS System).

Preventive Maintenance - Preventive maintenance activities ensure that equipment and instrumentation function properly through their design life. Examples of these activities are outlined below. Deficiencies are corrected at the time of the inspection where possible or work orders are written to facilitate cleaning or repair.

Instrumentation
Instruments that are critical to unit operations are reviewed and calibrated and cleaned as needed. Examples include flow meters, fire eyes, temperature monitoring devices and analyzers used for performance monitoring and control. Plant performance testing, through pressure surveys, temperature indicators, efficiency calculations or other data collection is used to resolve discrepancies in measurement devices.

Rotating Equipment

To ensure reliable operation of rotating equipment, spare equipment can be operated, where installed, to facilitate repair. Seals and bearings are replaced based on inspections or predictive maintenance activities.

Preventive maintenance tasks include cleaning, adjustment, and lubrication. Operators replace lubricating oil and grease on a frequency set by a master schedule for the Refinery. Appropriate lubricants are specified in a written plan. Steam turbine drivers' over-speed trip protection devices are tested at an established frequency. Fans and mixers are cleaned, lubricated and tested.

Fixed equipment
Thickness measurements and corrosion monitoring (probes, coupons, external UT, and critical process variables) are used to schedule preventive maintenance on vessels. Refurbishment of steel through weld buildup, plate replacement, coatings, or vessel replacement is used to ensure the mechanical integrity of pressure vessels. Refractory is replaced based on inspections, monitoring skin temperatures and thickness in fired equipment and based on internal visual inspections of refractory condition.

Jacketing/Tracing
Integrity of steam and electric tracing used in sulfur processing units is verified through regular plant walkthroughs/checklists by plant operations and maintenance personnel.

Catalyst & Chemicals
Unit catalyst and chemical activity is monitored by unit engineers and operators through pressure surveys and temperature indicators. Lab testing is conducted on intermediate and products to monitor quality. When quality is compromised, operational parameters or other means are employed to ensure continued performance.

Turnaround Inspection And Repair - Major maintenance turnarounds of the process and utility units are planned based on predictive/preventative maintenance activities. Prior to each planned shutdown, a work scope is developed for detailed inspection, repair, replacement and testing of equipment, catalyst and chemicals to ensure the unit will operate properly until the next planned shutdown.

The exact activities for each planned shutdown are determined by Operations, ME&I, Engineering, Reliability and Maintenance personnel prior to each shutdown. A criticality ranking process is used to determine which proposed work activities are included in the turnaround inspections and repairs.

Where practical, maintenance is performed on the equipment while the unit is still in operation. Typical turnaround activities include cleaning equipment, replacing/rejuvenating catalyst and chemicals and inspecting/repairing/replacing equipment as-needed.

Critical Instruments & Safety Instrumented System

The facility has a list of critical devices and has a procedure for handling Safety Instrumented Systems. Safety Instrumented Systems (SIS) take processes to a safe state when predetermined conditions are exceeded. This includes set points such as pressure, temperature, level, etc. These programs maintain the reliability of such devices and systems in order to ensure that shutdown systems have been appropriately established and are reliable.

Near Miss/Good Catch Program

A process is in place that encourages all employees to identify and report potential near misses. Near misses are undesired events which, under different circumstances, could have resulted in harm to people, damage to

property or the environment, or production/business loss. Near misses may also include unsafe practices, acts or conditions. The value of this program is that it facilitates:

- Identifying and addressing safety, procedural, environmental impact, design or equipment issues in a proactive, non-threatening manner.
- Identifies learning or training opportunities.
- Sharing of "lessons learned" and best practices with other employees and facilities.

Solomon Refining Comparative Analysis

The refinery participates in periodic comparative analysis. Flare volumes are one of the parameters included. Flare volumes are included in the metric to examine materials that could have been recovered from an economic standpoint. The purpose of the analysis is to determine how facilities compare with their peers in critical parameters.

4.3.2.2 Reactive Programs

When a failure has occurred, depending on the magnitude of a failure, the event will be examined in further detail. Listed below is an overview of the major elements of the programs in place to prevent recurrence of failures.

Incident Investigation

An internal procedure is in place which identifies the type of failures which require incident investigation. This process is a key part of our Health, Safety, and Environmental Management System. Failures captured by this process typically include accidents, injuries, events with potential off-site impact, some levels of flaring events, upsets which result in business loss. The procedure requires that an investigation be conducted and corrective actions identified. The regulatory drivers for this program include, but are not limited to; EPA's PSM, EPA Risk Management Program, Contra Costa County (CCC) Industrial Safety Ordinance (ISO), California's Accidental Release Prevention Program (CalARP). Additionally, there are strong business case drivers for completing incident investigation and preventing recurrence.

Root Cause Reporting

In addition to the incident investigations described above, root cause is required to be reported for higher level events based on various regulatory drivers. Regulatory drivers include but are not limited to; BAAQMD regulations 12-11 & 12-12, EPA SARA/CERCLA reporting requirements, Phillips 66 EPA Consent Decree requirements, Contra Costa County ISO.

Flare Monitoring & Reporting Procedure

The procedure documents the BAAQMD monitoring and reporting requirements. Additionally, it contains levels in which flare incident investigations must be conducted. The levels correspond to those required by BAAQMD and in the Phillips 66 Consent Decree. See Attachment E for general overview of the process for reviewing flaring events.

Use of Incident Investigation Documentation Software

Phillips 66 requires use of a Corporate wide software tool in which certain risk levels of incidents must be tracked. An overview of the incident is included in the software as well as the corrective actions. Depending on the level of the incident, the overview of the incident is immediately shared with Vice President level staff electronically via the software.

High Learning Value Event (HLVE)

If an event occurs in which a lesson learned might have value to sister refineries within Phillips 66 a system has been established for quickly sharing lessons learned so that other facilities may not experience a similar incident.

Corporate Incident Notification Requirements

Higher level events, such as off-site impacts, require immediate notification to the Corporation.

Corporate Health, Safety, and Environmental Reporting Requirements

Flaring volumes are required to be reported and are tracked refinery by refinery to the Corporation on a regular basis.

Key Performance Indicators (KPIs) -

KPIs are reported internally throughout the facility on a periodic basis. The KPIs include the number and cause of flaring events. The purpose is to inform plant personnel of occurrences of these events and to encourage continuous improvement by tracking cause and number.

Regulatory Notifications

There are various regulatory drivers which require notification of various levels of flaring events. Drivers include; BAAQMD 12-12, EPA's SARA/CERCLA, CCC Community Warning System requirements, etc.

5.0 Other Information Requested by APCO to Assure Compliance (401.5)

5.1 New Equipment Installations (404.2)

No other information has been requested by the APCO.

6.0 Root Cause Analysis and Corrective Action Requirements for Flares

6.1 BAAQMD Reportable Flaring Event Determination & Reporting of Cause

The BAAQMD mandates that root cause analysis be performed for flare events which exceed defined parameters.

Flaring Incident Definitions	BAAQMD 12-12-406
• Main Flare • MP30 Flare	≥500 lbs SO_2 per 24-hr ≥ 500,000 scf per calendar day
Root Cause Analysis (RCA) Completion Deadlines	Within 60 days following the end of the month [12-12-406][1] [1] The Phillips 66 Consent Decree requires ≥500 lbs SO_2 cause analysis to be completed within 45 days.

6.2 Root Cause Analysis and Corrective Action Requirements for Flares under MACT CC

The Refinery Sector Rule (RSR) changes under MACT CC, effective January 30, 2019, has new requirements for flares under 40 CFR 670(o)(3) with regard to conducting a root cause analysis and a corrective action analysis for each flow event that contains regulated material and that meets either of the following criteria

Flaring Incident Definitions	40 CFR 63.670(o)(3)
• Main Flare • MP30 Flare	• **> Smokeless Capacity**: The vent gas flow rate exceeds the smokeless capacity of the flare based on a 15-minute block average, and • **Visible Emissons** : Visible emissions are present from the flare for more than 5 minutes during any 2 consecutive hours during the release event. or • **>Smokeless Capacity**: The vent gas flow rate exceeds the smokeless capacity of the flare, and • **Velocity >400 fps or >Vmax**: the 15-minute block average flare tip velocity exceeds the maximum flare tip velocity.
Root Cause Analysis (RCA) Completion Deadlines	Within 45 days following the event. [1] The Phillips 66 Consent Decree requires ≥500 lbs SO_2 cause analysis to be completed within 45 days.

ATTACHMENT A

SAN FRANCISCO REFINERY
SIMPLIFIED FLARE SYSTEM OVERVIEW

ATTACHMENT B

Phillips 66
San Francisco Refinery, Rodeo, CA
Flare Gas System Detailed Description

Listed below is a detailed overview of the facility flare system. Although some parameters are contained in this description they are subject to change as operational or safety enhancements are identified.

The Refinery Relief and Blowdown Systems provide a means for recovery or safe disposal of gases and liquids, which may be generated by the process units. Typical sources of normal flow include coke drum steamout and switching, sampling, activation of relief valves, distillation tower overhead vapors, and purging of equipment for maintenance or startup. During emergencies, major flow may occur from heater or unit depressuring and the lifting of pressure relief valves. Gases and liquids flow through relief and blowdown lines to blowdown accumulators and knockout drums. Gases and vapors pass overhead to be recovered or flared. The liquids are generally reprocessed through appropriate operating units.

There are two flares in the refinery – the Main Flare and MP-30 Flare. There are three relief and blowdown systems; the Refinery, the Hot Coker Blowdown, and the MP-30 system. Typically the gases sent to the blowdown systems are recovered, treated, and then utilized for fuel in the facility heaters and co-generation equipment. During periods when gases are not recovered, the flare gases are typically sent to the Main Flare. The Refinery and Hot Coker Blowdown system gases are routed to the Main Flare. The units located in the MP30 Complex relieve to the MP-30 Blowdown system. Typically, the gases sent to the MP-30 Blowdown System are recovered in conjunction with the gases from the Refinery and Hot Coker Blowdown system due to interconnecting piping. This interconnecting piping also accommodates minor flaring so that gases from the MP-30 Blowdown System are typically sent to the Main Flare. During major releases from MP-30, the gases would be flared at the MP-30 flare.

There are periods in which the Main Flare is shutdown in association with the Unicracker Complex shutdown. During these periods, the Refinery Blowdown system can be diverted to the MP-30 Flare. The Hot Coker Blowdown system would also be diverted to the MP-30 Flare while the Main Flare is shutdown.

<u>Refinery Relief and Blowdown System</u>

The Main Relief and Blowdown system handles relief and blowdown from the Coking Unit 200, Crude Unit 267, Gasoline Fractionation, Caustic Treating and Deisobutanizer Unit 215, Diesel Hydrotreating Unit 250, Steam Power Plant, Hydrogen Plant Unit 110, Fuel Gas Center Unit 233, the Unicracker Complex including Reforming Unit 244, Unit 246 Heavy Oil Hydrocracker (mid-2009), and Unisar Unit 248, Sulfur Units, Isomerization Unit 228, the Unit 120 3rd Party Hydrogen Plant (mid-2009), and minor MP-30 releases.

<u>F-1 Blowdown Drum</u>

Vapor and liquid releases from the units listed above flow through various blowdown headers to Refinery Blowdown Drum F-1. The Unicracker complex has its own separate Blowdown Drum F-45 upstream of F-1 to limit the liquid releases to F-1. Vapor and liquid release from the Unicracker Complex discharge into F-45. Liquids are knocked out and the vapor flows from F-45 through a 36-42″ header to F-1. Not all relief valves from the Unicracker Complex discharge to F-45. Relief valves from D-305 Fractionator discharge directly into the 36-42 ″ header from F-45.

The Steam Power Plant and Unit 110 also have separate Blowdown Drums upstream of F-1 – Blowdown Drum F-35 and Flare Knock Out Drum V-18, respectively. The sites of the Steam Power Plant and Unit 110 have low points in their relief headers. Liquids condensing in the SPP and Unit 110 flare headers to F-1 flow back down the flare header to their respective blowdown drums.

Entrained liquids are knocked out in F-1. At a high liquid level in F-1, blowdown pumps G-1A/1B automatically start and pump the collected liquid through Cooling Water Exchanger E-1 to the foul water tank. The foul water tank has a water phase and hydrocarbon liquid phase. The water phase is fed to the Phenolic Water

Stripper D-901. The hydrocarbon liquid phase becomes feed to Coking Unit 200 or to Naphtha Hydrotreater Unit 230.

F-3 Water Seal Drum and G-503 Flare Vapor Recovery Compressor

Water Seal Drum F-3, located between drum F-1 and the Main Flare, permits the use of the blowdown system and its drums as suction surge for the G-503 Flare Vapor Recovery Compressor during normal releases. F-3 usually contains about an eight foot water seal that diverts the gas in Blowdown Drum F-1 down the main 36″ Unicracker blowdown header to the F-509 Knock Out Drum for G-503. The G-503 compressor, located in the Coker Light Ends area, returns the compressed gases to the refinery fuel gas system. The compressor design flowrate is 200,000 scf/hr of 23 MW gas. G-503 may also spare the Unit 200 G-501 Coker Wet Gas Compressor or the Unit 200 Odor Abatement compressors G-60A/B/C. When the vapor flowrate is higher than 200,000 scf/hr, vapors released to the refinery blowdown system break through the F-3 water seal and flow to the Main Flare. If the vapors released are from the MP-30 blowdown system, the vapors may also break through the F-604 water seal and flow to the MP-30 Flare. When G-503 is in G-501 or G-60A/B/C service, or G-503 is down, the F-3 water seal is removed, and vapors flow directly to the Main Flare. The F-604 water seal is not removed when G-503 is down, so that flaring of the normal releases only occurs at one flare stack.

Main Flare Header

Flare gas from D-7 Blowdown Drum and Unit 240 reactor depressuring gas release downstream of Water Seal Drum F-3. The Unit 240 reactor depressuring line bypasses drum F-1 and Water Seal Drum F-3 to accommodate depressuring of the reactors at a 300 psi/min rate. The Hot Coker Blowdown bypasses the F-3 Water Seal Drum to minimize back pressure on the Hot Coker Blowdown Drum D-7.

Any gas breaking through the F-3 water seal, vapor from D-7, and/or Unit 240 depressuring gas enter the Main Flare Stack C-1 through a water seal at the base of the flare. This seal is one of the flashback protections for the Main Flare - prevents the backflow of gas or air into the flare lines, which could create explosive mixtures. Additional flashback protections are the molecular seal and continuous purge of the flare stack. An on-line oxygen analyzer is located between F-3 and 19C-1 and sounds an alarm on high oxygen content in the Unit 200 DCS to warn operators of potentially explosive mixtures in the flare header

.Vacuum Protection for Refinery Blowdown System

After a hot vapor release through F-3, the water seal in F-3 will be automatically re-established on level control. To ensure flashback from the flare cannot occur, natural gas is added to F-1 on pressure control (PIC-530) at low pressures. The pressure indicator controller PIC-530 indicates and alarms in the Unit 200 DCS.

Main Flare Purge Gas Requirements

Natural gas supplies purge gas to prevent flashback. The purge gas enters the Main Flare above the water seal at the base of the flare. The molecular seal prevents both convective and diffusional backflow of air into the stack. The proprietary seal design allows some of the rising flare and purge gases to be trapped in the seal. This creates a zone, which is higher than atmospheric pressure and lower in molecular weight than air (lighter than air). Air cannot backflow through such a zone.

Smokeless Flaring at Main Flare

A small continuous flow of steam to the flare is provided to prevent a condensate build-up in the steam line and provide cooling to the flare tip. During a flaring event, additional steam is injected at the tip to aspirate air into the flame and ensure smokeless burning of the flare gases. Flow indicators, located on the two flare headers - 10″ header from D-1 and 42″ header from F-1-to the Main Flare stack- detect releases to the flare. These flow indicators also alarm in the Unit 200 DCS, so that the Unit 200 operators are aware that gas is being released to the flare. A monitor of the flare is located in the Unit 200 control room; so that the Unit 200 operators can continuously view the flare operation. If the flare is smoking, the steam flowrate to the flare tip is adjusted manually by the Unit boardman from the Unit 200 DCS. The CFEP project relief system changes are making enhancements to the steam associated with both flares to allow for higher volume flaring events to occur without resulting in a smoking flare. These enhancements will be taking place mid-2009.

MP-30 Relief and Blowdown System

When the Main Flare is in service, normally only the MP-30 Complex major releases flow to the MP-30 Flare. However, the MP-30 Relief and Blowdown System can also handle releases from Coking Unit 200, Crude Unit 267, Gasoline Fractionation, Caustic Treating and Deisobutanizer Unit 215, Diesel Hydrotreating Unit 250,

Steam Power Plant, Hydrogen Plant Unit 110, Fuel Gas Center Unit 233, Sulfur Units, and Isomerization Unit 228, when the Main Flare is down for maintenance. During this maintenance period, the blowdown headers for Units 267, 200, 215, 250, 110, 233, 228, Steam Power Plant, and Sulfur Plant Complex headers can be diverted to Blowdown Drum F-2. Releases to F-2 will flow directly to the MP-30 Flare Stack

Diverting the blowdown headers to F-2 is only done, when Blowdown Drum F-1 and/or Water Seal Drum F-3 must also be inspected or repaired with the Main Flare. If F-1 and F-3 do not have to be inspected when Main Flare is down, a 26″ interconnecting line downstream of F-3 is opened to the 36″ header from F-2. This allows the refinery to keep G-503 Flare Compressor in service during the maintenance of the Main Flare and minimize flaring. Only major releases will break the F-3 water seal and flow through the 26″ interconnecting line to the MP-30 Flare.

MP-30 Complex Blowdown Drum F-600

Releases from the Hydrotreating Units 229 and 230 and Reforming Unit 231 flow to Blowdown Drum F-600. Any liquid releases or entrained liquid will drop out in F-600. Liquid in F-600 gravitates to F-603 Drain Pot. On high level in F-603, blowdown pumps G-600/601 automatically start. The liquids are pumped by level control through Blowdown Slops Cooler E-600 to the foul water tank, the same foul water tank for the Refinery Relief and Blowdown System. When level in F-603 has dropped to the preset level, the pumps automatically stop.

Minor vapor releases up to 200,000 scf/hr are diverted from F-600 to the Refinery Blowdown System by a fifteen foot water seal in F-604 Water Seal Drum downstream of F-600. These minor releases flow to the Refinery Blowdown System through a 12″ cross-connecting line to the Sulfur Plant/Isomerization Unit common blowdown header. Major vapor releases break the water seal in F-604 and flow through a 42″/48″ flare header to the MP-30 Flare.

Vacuum Protection for F-600 and F-604

To prevent a vacuum, PIC-601 on F-600 adds natural gas to the MP-30 Blowdown on low pressure. In addition, the pipe entering the F-604 seal leg rises 19 feet above the top of the 15 foot water seal. Therefore, if a vacuum or partial vacuum occurs in the MP-30 blowdown system, water in F-604 will back flow up the seal pipe, but the seal will not be broken.

On low pressure in the flare header, separate pressure controller PIC-658 adds natural gas to the flare line to prevent flashback. A small continuous flow of natural gas through a restriction orifice sweeps the flare line to ensure the line does not contain any H_2S, NH_3, or other heavier hydrocarbons after flaring ceases.

MP-30 Flare F-2 Blowdown Drum (Partial spare for F-1)

When blowdown headers are lined up to F-2, any entrained liquids in the vapor releases or any liquid releases to F-2 are knocked out in F-2. F-2 is also a low point in the system. Any liquid that condenses in the 36″ header will flow back to F-2. At a high level in F-2, blowdown pumps G-2A/B automatically start and pump the collected liquid through Cooling Water Exchanger E-2 to the foul water tank. The foul water tank is the same foul water tank as listed for the Refinery Relief and Blowdown System. When a low level in F-2 is again reached, the blowdown pumps automatically stop.

Even when no Unit blowdown headers are lined up to F-2, F-2 must remain in service when the MP-30 Flare is in service. Any high level at the base of the MP-30 flare is gravity drained to F-2. The continuous purge required for the MP-30 Flare Stack to prevent flashback also flows through F-2.

MP-30 Flare Operation

The MP-30 flare operates similarly to the Main Flare. The MP-30 Flare also has four electronic spark ignited pilots. Pilot operation is basically the same as the Main Flare.

The MP-30 Flare also has a molecular seal. The flare tip is 48″diameter... Natural gas is also used as the purge gas for to prevent flashback. The continuous purge gas requirement of 0.01 ft/sec to the MP-30 Flare Stack is supplied through pressure regulator PCV-565 and flow restriction orifice FO-523 to 19F-2. The purge gas flows from 19F-2 through the 36″ flare header to the MP-30 Flare. (The minimum purge requirement of 445 SCF/hr for this flare stack is set by the manufacturer's molecular seal and flare tip design.)

In addition to the molecular seal and continuous purge, a water seal exists at the base of the flare stack to prevent flashback. The seal is designed to have a continuous water purge of 0.5 gpm. A continuous water purge ensures that any condensed hydrocarbon vapor that may accumulate is removed from the base of the

flare. The continuous water purge and/or any condensed hydrocarbon gravitate from to F-2 for removal to the foul water tank.

An on-line oxygen analyzer is located on the main 48″ flare header downstream of the 36″ F-2 flare header and 12″ D-7 header connections. The analyzer sounds an alarm on high oxygen content in the Unit 200 DCS to warn operators of potentially explosive mixtures in the MP-30 flare system.

Smokeless Flaring at MP-30 Flare

A small continuous flow of steam is provided to the flare tip to prevent a condensate build-up in the steam line and provide cooling to the flare tip. When flaring occurs, additional steam is injected at the tip to aspirate air into the flame and ensure smokeless burning of the flare gases. Flow indicators, located on the 48″ header from MP-30, the 36″ header from F-2, and the 12″ header from D-7 detect releases to the flare. These flow indicators alarm on high flowrates in the Unit 200 DCS. A monitor of the flare is also located in the Unit 200 control room; so that the Unit 200 boardman can continuously view the MP-30 flare. If there is a flow to the flare or the flare is smoking, the steam to the flare tip is manually increased by the boardman from the Unit 200 DCS.

Hot Coker Blowdown System

The Hot Coker Blowdown system was built with the Unicracker Complex in 1970. Releases to the hot Coker Blowdown System flow through a 16″ blowdown header to Blowdown Accumulator F-6. Even though the system is described as the Hot Coker Blowdown system, not all releases are hot nor are all releases from Unit 200 Coking Section. Originally, most of the releases to the blowdown system were from relief valves on heater outlets, blowdown lines from heater outlets, and the relief valves on the Unit 200 Coke Drums (hot releases in excess of 650 °F). However, other factors such as type of material released from a relief valve (i.e. crude) will also cause the relief valve to be connected to the Hot Coker Blowdown System. Other Unit 200 connections include Unit 200 Vacuum Tower relief valve, crude feed pump relief valve, various thermal relief valves for heat exchangers, and pump clean-out/ blowdown lines at Unit 200. The Unit 267 Desalter, crude pump relief valves, and Diesel Filter relief valves discharge to the Hot Coker Blowdown System as well. Although Unit 233 can relieve to either F-6 or F-3 the primary route is through F-6. This is manually controlled. During periods of fuel gas imbalance the excess clean fuel gas is vented to F-6 through the 10” line.

Liquid releases to the Hot Coker Blowdown system drop out in F-6. A high liquid alarm on F-6 that sounds on the DCS alerts the Unit 200 Operators that liquid is flowing to F-6. Operators manually start blowdown drum pump G-61 to pump the liquid to the recoverable oil tank. If the liquid is a hot release, the Operators will divert cooler gas oil from Unit 200 to the Hot Coker Blowdown header to cool the liquid release before pumping to tankage.

Any vapor that is released from F-6 flows to Blowdown Drum D-7. On high temperature in the D-7 overhead line (150 °F), a water deluge control valve automatically opens to flood water into D-7. A high temperature alarm sounds in the Unit 200 control room on the DCS and a valve positioner alarm from this control valve sounds on the Unit 200 alarm panel when the deluge valve opens. This alerts operators that a hot release has occurred and additional operator intervention may be required for D-7. Water gravitates through the water deluge control valve from Tank 286 to D-7 and condenses most of the vapor released to D-7 by contact with the vapor by flowing over the disc and donut baffles inside D-7. Any vapor not condensed will flow overhead from D-7 to one of the flares for combustion. D-7 overhead is normally lined up to the Main Flare.

The water and any entrained hydrocarbon liquid will discharge from D-7 through a water seal leg to the process sewer. During any release at the flares or to the Hot Coker Blowdown System, the pressure in D-7 will not exceed 15 psig. This water seal leg ensures that the water seal is not blown during any potential release.

Some of the condensed hydrocarbon in D-7 will separate from the water at the base of D-7. The operators manually line up D-7 bottom to the Blowdown Drum Pump G-61 to pump the hydrocarbon liquids from D-7 to the recoverable oil tank.

Gasses from the Hot Coker Blowdown system are recovered if the pressure in the blowdown does not exceed the pressure necessary to blow the water seal in the C-1 Flare Stack Water Seal Drum. Gasses are periodically sent to the flare from the Hot Coker Blowdown system. This 10” line is monitored with a separate ultrasonic meter. In 2006 there was approximately 150 hours in which flow was sent to the flare from this system. The majority of these 150 hours, approximately 90%, was during a period of fuel gas imbalance when

clean fuel gas was being sent to the flare. (Clean fuel gas is not generated from the Hot Coker Blowdown system, excess gas is routed through the 10" line upstream of where the flow is monitored).

Flare Pilots

Each stack tip has four electronic spark ignited pilots, each with its own ignition system. The pilots utilize electronic spark ignition for an automatic re-light function. When the thermocouple on the pilot senses a pilot outage (low thermocouple reading), the spark igniter immediately reacts to re-light the pilot. After a set period of time, the loss of pilot indication will alarm in the DCS in the control room.

As a back-up system to this automatic electronic spark ignition system, each pilot has a manual flame front generator line.

Temperature indicators for each pilot also alarm on low temperature in the to alert the operators that pilot flame-out has possibly occurred. If the low temperature alarm remains on because the automatic spark ignition system has not been successful to re-ignite the pilot, an operator is then dispatched to the field to manually operate the flame front generator to re-ignite the pilot.

Capacity of the Relief and Blowdown Systems

The Refinery and MP-30 flare systems are sized to handle releases during refinery-wide utility failures - refinery-wide power failure, total saltwater cooling system failure, or 150 psig steam failure. The maximum design relief case for both these flare systems is currently a refinery-wide power failure. The relief scenarios were re-evaluated as part of the 2009 CFEP. The design of an individual unit blowdown header may be based on other failures. For example the DIB blowdown header design is based on a refinery-wide salt water failure. The Unit 267 blowdown header design is based on a 150 psig steam failure.

The MP-30 blowdown system (consisting of F-600, F-604, and MP-30 blowdown header) is sized to handle releases from common utility failures for the MP-30 Complex - Units 229, 230, and 231. The two major utility failures, causing the highest relief loads, are power failure and cooling water failure. Power failure creates the highest radiation release concern in the flare area, because a refinery-wide power failure can cause both the MP-30 Flare and the Main Flare to have large releases. An MP-30 cooling water failure creates the highest back pressure in the system for certain MP-30 relief valves.

Interrelated Systems

Wet Gas Stream, process units, and compressor - The light ends section of Unit 200, Crude/Coking Unit, processes the bubble tower wet gas and bubble tower raw naphtha stream to produce a stabilized naphtha. Wet gas (high C3 – C5 content) from the bubble tower reflux drum is compressed by the G-501 Wet Gas Compressor, a multi-stage centrifugal compressor. The compressed gas is mixed with the bubble tower raw naphtha. In exchanger E-511, salt water cools the combined stream before the stream discharges into the F-502 High-Pressure Separator. Vapor from the high-pressure separator flows to the D-503 Absorber. In D-503, the vapor is contacted with a stripped lean oil which removes the heavier components from the vapor. The scrubbed off-gas from D-503 is then pressure controlled to the light ends sour fuel gas header. The combined sour fuel gas stream from the light ends section flows to Unit 233, the Refinery Fuel Gas Center.

The Flare Gas Recovery Compressor (G-503) can be put into Wet Gas Compressor (G-501) service, if needed. This is done on a planned and emergency basis. The value of this is to minimize overall flaring. The "Wet Gas" Compressor runs at a rate much higher than the Flare Gas Recovery Compressor. The Flare Gas Recovery Compressor typically runs at about 50% of the maximum flow on an annual average basis. When the Flare Gas Recovery Compressor is put into Wet Gas Compressor service the entire capacity of the Flare Gas Recovery Compressor is utilized. Although flaring will likely occur, the total rate of flaring has been minimized by approximately 2.3 MMSCFD by placing the Flare Gas Recovery Compressor into Wet Gas Compressor service.

Odor Abatement: stream, process units, and compressor – There is a group of compressors and a closed vent system referred to as the "Odor Abatement" (OA) system. The OA System is a Refinery wide collection system that includes tank blanketing, vacuum towers non-condensable vapor, de-gassing vapors from

various processes, butane tanks vents, and the iso-pentane tank vents. Seasonal ambient temperature increases will impact various processes causing an increase in flow of material to the OA System. The purpose of the system is to collect and control vapors from the sources listed above. Natural gas is purged into the system based on certain set points. Natural Gas as Blanketing Gas for tanks has been used due to low H2S/Sulfur content, nil oxygen content, consistent quality, and low molecular weight. Low molecular weight and low H_2S/Sulfur are only critical to finished low sulfur products. Nil oxygen content is critical for finished product and intermediate products to prevent formation of materials that foul preheat exchangers.

The compressors help maintain pressure in the system and maintain movement of the vapors. The vapors are routed, via the odor abatement compressors directly to Unit 233 Fuel Gas Center. The vapors are co-mingled with other recovered streams, such as the U200 Wet Gas & Flare Gas Recovery vapors, for sulfur removal.

There are 4 odor abatement compressors. Typically, one or two compressors are operating with a third one as backup. A 4th compressor was installed 2nd Quarter 2009. Following the installation of the 4th compressor, 2 to 3 compressors will typically be operated with 1 to 2 spare compressors. The Flare Gas Recovery Compressor can be put into Odor Abatement service, if needed. Without compressor(s) in odor abatement service the tanks and other equipment associated with the system may relieve to the atmosphere, resulting in potential excess emissions and odors. By utilizing the Flare Gas Recovery Compressor in Odor Abatement service, emissions directly to the atmosphere are mitigated but flaring will likely take place.

F-502**-** F-502 which is shown on the PFD shown in Attachment B is related to the Wet Gas Compressor system described above. Gasses collected and compressed in the G-501 Wet Gas Compressor are then sent to the Unit 200 F-502 High Pressure Separator. If the Flare Gas Recovery Compressor (G-503) is utilized in Wet Gas Compressor service then the Flare Gas Recovery Compressor would discharge to the F-502 separator.

ATTACHMENT C

SAN FRANCISCO REFINERY
FLARE SYSTEM PROCESS FLOW DIAGRAM

ATTACHMENT D

Cross Reference Index
40 CFR 63 Subpart CC

Flare Minimization Plan, BAAQMD 12-12
Phillips 66, San Francisco Refinery
BAAQMD Plant 16

40 CFR 63 Subpart CC RSR Flare Plan 63.670(o) Cross Reference Table		
Citation	**Regulation Description**	**All Flares**
63.670(o)(1)(i)	A listing of all refinery process units, ancillary equipment, and fuel gas systems connected to the flare for each affected flare.	Att A, B, C, E, M
63.670(o)(1)(ii)	An assessment of whether discharges to affected flares from these process units, ancillary equipment and fuel gas systems can be minimized or prevented during periods of startup, shutdown, or emergency releases. The flare minimization assessment must (at a minimum) consider the items in paragraphs (o)(1)(ii)(A) through (C) of this section. The assessment must provide clear rationale in terms of costs (capital and annual operating), natural gas offset credits (if applicable), technical feasibility, secondary environmental impacts and safety considerations for the selected minimization alternative(s) or a statement, with justifications, that flow reduction could not be achieved. Based upon the assessment, each owner or operator of an affected flare shall identify the minimization alternatives that it has implemented by the due date of the flare management plan and shall include a schedule for the prompt implementation of any selected measures that cannot reasonably be completed as of that date.	3.2 Fuel Gas Combustion SO2 Emissions 4.0 4.2.2.1 Att N
63.670(o)(1)(ii)(A)	Modification in startup and shutdown procedures to reduce the quantity of process gas discharge to the flare.	3.1 4.0 4.1
63.670(o)(1)(ii)(B)	Implementation of prevention measures listed for pressure relief devices in §63.648(j)(3)(ii)(A) through (E) for each pressure relief device that can discharge to the flare.	2.2.4
63.670(o)(1)(ii)(C)	Installation of a flare gas recovery system or, for facilities that are fuel gas rich, a flare gas recovery system and a co-generation unit or combined heat and power unit.	2.2.3.3, 2.2.3.4 3.1 3.2 Fuel Gas Combustion SO2 Emissions 4.2.2.1 Att L Att N
63.670(o)(1)(iii)	A description of each affected flare containing the information in paragraphs (o)(1)(iii)(A) through (G) of this section.	See below
63.670(o)(1)(iii)(A)	A general description of the flare, including whether it is a ground flare or elevated (including height), the type of assist system (e.g., air, steam, pressure, non-assisted), whether the flare is used on a routine basis or if it is only used during periods of startup, shutdown or emergency release, and whether the flare is equipped with a flare gas recovery system.	Att K
63.670(o)(1)(iii)(B)	The smokeless capacity of the flare based on a 15-minute block average and design conditions.	Att K
63.670(o)(1)(iii)(C)	The maximum vent gas flow rate (hydraulic load capacity).	Att K
63.670(o)(1)(iii)(D)	The maximum supplemental gas flow rate.	Att K
63.670(o)(1)(iii)(E)	For flares that receive assist steam, the minimum total steam rate and the maximum total steam rate.	Att K
63.670(o)(1)(iii)(F)	For flares that receive assist air, an indication of whether the fan/blower is single speed, multi-fixed speed (e.g., high, medium, and low speeds), or variable speeds. For fans/blowers with fixed speeds, provide the estimated assist air flow rate at each fixed speed. For variable speeds, provide the design fan curve (e.g., air flow rate as a function of power input).	n/a
63.670(o)(1)(iii)(G)	Simple process flow diagram showing the locations of the flare following components of the flare: Flare tip (date installed, manufacturer, nominal and effective tip diameter, tip drawing); knockout or surge drum(s) or pot(s) (including dimensions and design capacities); flare header(s) and subheader(s); assist system; and ignition system.	Att B Att C Att K
63.670(o)(1)(iv)	Description and simple process flow diagram showing all gas lines (including flare waste gas, purge or sweep gas (as applicable), supplemental gas) that are associated with the flare. For purge, sweep, supplemental gas, identify the type of gas used. Designate which lines are exempt from composition or net heating value monitoring and why (e.g., natural gas, gas streams that have been demonstrated to have consistent composition, pilot gas). Designate which lines are monitored and identify on the process flow diagram the location and type of each monitor. Designate the pressure relief devices that are vented to the flare.	Att C Att J
63.670(o)(1)(v)	For each flow rate, gas composition, net heating value or hydrogen concentration monitor identified in paragraph (o)(1)(iv) of this section, provide a detailed description of the manufacturer's specifications, including, but not limited to, make, model, type, range, precision, accuracy, calibration, maintenance and quality assurance procedures.	2.2.4
63.670(o)(1)(vi)	For each pressure relief device vented to the flare identified in paragraph (o)(1)(iv) of this section,	2.2.5

40 CFR 63 Subpart CC RSR Flare Plan 63.670(o) Cross Reference Table		
Citation	**Regulation Description**	**All Flares**
	provide a detailed description of each pressure release device, including type of relief device (rupture disc, valve type) diameter of the relief device opening, set pressure of the relief device and listing of the prevention measures implemented. This information may be maintained in an electronic database on-site and does not need to be submitted as part of the flare management plan unless requested to do so by the Administrator.	Att J
63.670(o)(1)(vii)	Procedures to minimize or eliminate discharges to the flare during the planned startup and shutdown of the refinery process units and ancillary equipment that are connected to the affected flare, together with a schedule for the prompt implementation of any procedures that cannot reasonably be implemented as of the date of the submission of the flare management plan.	3.1 4.0 4.1

ATTACHMENT A

SAN FRANCISCO REFINERY
SIMPLIFIED FLARE SYSTEM OVERVIEW

Attachment A

San Francisco Refinery
Simplified Flare System Overview

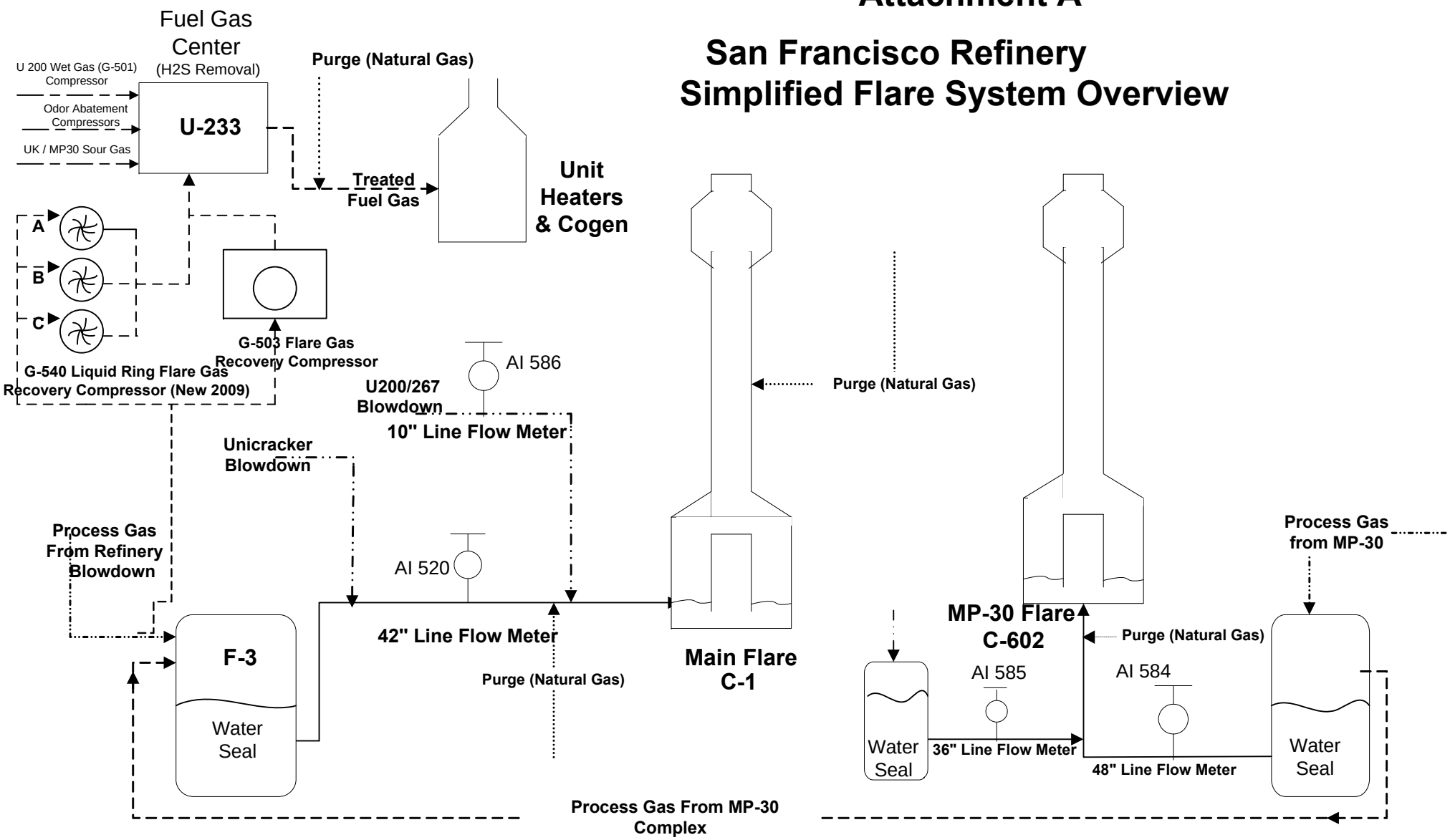

ATTACHMENT B

Phillips 66
San Francisco Refinery, Rodeo, CA
Flare Gas System Detailed Description

Listed below is a detailed overview of the facility flare system. Although some parameters are contained in this description they are subject to change as operational or safety enhancements are identified.

The Refinery Relief and Blowdown Systems provide a means for recovery or safe disposal of gases and liquids, which may be generated by the process units. Typical sources of normal flow include coke drum steamout and switching, sampling, activation of relief valves, distillation tower overhead vapors, and purging of equipment for maintenance or startup. During emergencies, major flow may occur from heater or unit depressuring and the lifting of pressure relief valves. Gases and liquids flow through relief and blowdown lines to blowdown accumulators and knockout drums. Gases and vapors pass overhead to be recovered or flared. The liquids are generally reprocessed through appropriate operating units.

There are two flares in the refinery – the Main Flare and MP-30 Flare. There are three relief and blowdown systems; the Refinery, the Hot Coker Blowdown, and the MP-30 system. Typically the gases sent to the blowdown systems are recovered, treated, and then utilized for fuel in the facility heaters and co-generation equipment. During periods when gases are not recovered, the flare gases are typically sent to the Main Flare. The Refinery and Hot Coker Blowdown system gases are routed to the Main Flare. The units located in the MP30 Complex relieve to the MP-30 Blowdown system. Typically, the gases sent to the MP-30 Blowdown System are recovered in conjunction with the gases from the Refinery and Hot Coker Blowdown system due to interconnecting piping. This interconnecting piping also accommodates minor flaring so that gases from the MP-30 Blowdown System are typically sent to the Main Flare. During major releases from MP-30, the gases would be flared at the MP-30 flare.

There are periods in which the Main Flare is shutdown in association with the Unicracker Complex shutdown. During these periods, the Refinery Blowdown system can be diverted to the MP-30 Flare. The Hot Coker Blowdown system would also be diverted to the MP-30 Flare while the Main Flare is shutdown.

<u>Refinery Relief and Blowdown System</u>

The Main Relief and Blowdown system handles relief and blowdown from the Coking Unit 200, Crude Unit 267, Gasoline Fractionation, Caustic Treating and Deisobutanizer Unit 215, Diesel Hydrotreating Unit 250, Steam Power Plant, Hydrogen Plant Unit 110, Fuel Gas Center Unit 233, the Unicracker Complex including Reforming Unit 244, Unit 246 Heavy Oil Hydrocracker (mid-2009), and Unisar Unit 248, Sulfur Units, Isomerization Unit 228, the Unit 120 3rd Party Hydrogen Plant (mid-2009), and minor MP-30 releases.

<u>F-1 Blowdown Drum</u>

Vapor and liquid releases from the units listed above flow through various blowdown headers to Refinery Blowdown Drum F-1. The Unicracker complex has its own separate Blowdown Drum F-45 upstream of F-1 to limit the liquid releases to F-1. Vapor and liquid release from the Unicracker Complex discharge into F-45. Liquids are knocked out and the vapor flows from F-45 through a 36-42″ header to F-1. Not all relief valves from the Unicracker Complex discharge to F-45. Relief valves from D-305 Fractionator discharge directly into the 36-42 ″ header from F-45.

The Steam Power Plant and Unit 110 also have separate Blowdown Drums upstream of F-1 – Blowdown Drum F-35 and Flare Knock Out Drum V-18, respectively. The sites of the Steam Power Plant and Unit 110 have low points in their relief headers. Liquids condensing in the SPP and Unit 110 flare headers to F-1 flow back down the flare header to their respective blowdown drums.

Entrained liquids are knocked out in F-1. At a high liquid level in F-1, blowdown pumps G-1A/1B automatically start and pump the collected liquid through Cooling Water Exchanger E-1 to the foul water tank. The foul water tank has a water phase and hydrocarbon liquid phase. The water phase is fed to the Phenolic Water

Stripper D-901. The hydrocarbon liquid phase becomes feed to Coking Unit 200 or to Naphtha Hydrotreater Unit 230.

F-3 Water Seal Drum and G-503 Flare Vapor Recovery Compressor

Water Seal Drum F-3, located between drum F-1 and the Main Flare, permits the use of the blowdown system and its drums as suction surge for the G-503 Flare Vapor Recovery Compressor during normal releases. F-3 usually contains about an eight foot water seal that diverts the gas in Blowdown Drum F-1 down the main 36″ Unicracker blowdown header to the F-509 Knock Out Drum for G-503. The G-503 compressor, located in the Coker Light Ends area, returns the compressed gases to the refinery fuel gas system. The compressor design flowrate is 200,000 scf/hr of 23 MW gas. G-503 may also spare the Unit 200 G-501 Coker Wet Gas Compressor or the Unit 200 Odor Abatement compressors G-60A/B/C. When the vapor flowrate is higher than 200,000 scf/hr, vapors released to the refinery blowdown system break through the F-3 water seal and flow to the Main Flare. If the vapors released are from the MP-30 blowdown system, the vapors may also break through the F-604 water seal and flow to the MP-30 Flare. When G-503 is in G-501 or G-60A/B/C service, or G-503 is down, the F-3 water seal is removed, and vapors flow directly to the Main Flare. The F-604 water seal is not removed when G-503 is down, so that flaring of the normal releases only occurs at one flare stack.

Main Flare Header

Flare gas from D-7 Blowdown Drum and Unit 240 reactor depressuring gas release downstream of Water Seal Drum F-3. The Unit 240 reactor depressuring line bypasses drum F-1 and Water Seal Drum F-3 to accommodate depressuring of the reactors at a 300 psi/min rate. The Hot Coker Blowdown bypasses the F-3 Water Seal Drum to minimize back pressure on the Hot Coker Blowdown Drum D-7.

Any gas breaking through the F-3 water seal, vapor from D-7, and/or Unit 240 depressuring gas enter the Main Flare Stack C-1 through a water seal at the base of the flare. This seal is one of the flashback protections for the Main Flare - prevents the backflow of gas or air into the flare lines, which could create explosive mixtures. Additional flashback protections are the molecular seal and continuous purge of the flare stack. An on-line oxygen analyzer is located between F-3 and 19C-1 and sounds an alarm on high oxygen content in the Unit 200 DCS to warn operators of potentially explosive mixtures in the flare header

.Vacuum Protection for Refinery Blowdown System

After a hot vapor release through F-3, the water seal in F-3 will be automatically re-established on level control. To ensure flashback from the flare cannot occur, natural gas is added to F-1 on pressure control (PIC-530) at low pressures. The pressure indicator controller PIC-530 indicates and alarms in the Unit 200 DCS.

Main Flare Purge Gas Requirements

Natural gas supplies purge gas to prevent flashback. The purge gas enters the Main Flare above the water seal at the base of the flare. The molecular seal prevents both convective and diffusional backflow of air into the stack. The proprietary seal design allows some of the rising flare and purge gases to be trapped in the seal. This creates a zone, which is higher than atmospheric pressure and lower in molecular weight than air (lighter than air). Air cannot backflow through such a zone.

Smokeless Flaring at Main Flare

A small continuous flow of steam to the flare is provided to prevent a condensate build-up in the steam line and provide cooling to the flare tip. During a flaring event, additional steam is injected at the tip to aspirate air into the flame and ensure smokeless burning of the flare gases. Flow indicators, located on the two flare headers - 10″ header from D-1 and 42″ header from F-1-to the Main Flare stack- detect releases to the flare. These flow indicators also alarm in the Unit 200 DCS, so that the Unit 200 operators are aware that gas is being released to the flare. A monitor of the flare is located in the Unit 200 control room; so that the Unit 200 operators can continuously view the flare operation. If the flare is smoking, the steam flowrate to the flare tip is adjusted manually by the Unit boardman from the Unit 200 DCS. The CFEP project relief system changes are making enhancements to the steam associated with both flares to allow for higher volume flaring events to occur without resulting in a smoking flare. These enhancements will be taking place mid-2009.

MP-30 Relief and Blowdown System

When the Main Flare is in service, normally only the MP-30 Complex major releases flow to the MP-30 Flare. However, the MP-30 Relief and Blowdown System can also handle releases from Coking Unit 200, Crude Unit 267, Gasoline Fractionation, Caustic Treating and Deisobutanizer Unit 215, Diesel Hydrotreating Unit 250,

Steam Power Plant, Hydrogen Plant Unit 110, Fuel Gas Center Unit 233, Sulfur Units, and Isomerization Unit 228, when the Main Flare is down for maintenance. During this maintenance period, the blowdown headers for Units 267, 200, 215, 250, 110, 233, 228, Steam Power Plant, and Sulfur Plant Complex headers can be diverted to Blowdown Drum F-2. Releases to F-2 will flow directly to the MP-30 Flare Stack

Diverting the blowdown headers to F-2 is only done, when Blowdown Drum F-1 and/or Water Seal Drum F-3 must also be inspected or repaired with the Main Flare. If F-1 and F-3 do not have to be inspected when Main Flare is down, a 26″ interconnecting line downstream of F-3 is opened to the 36″ header from F-2. This allows the refinery to keep G-503 Flare Compressor in service during the maintenance of the Main Flare and minimize flaring. Only major releases will break the F-3 water seal and flow through the 26″ interconnecting line to the MP-30 Flare.

MP-30 Complex Blowdown Drum F-600

Releases from the Hydrotreating Units 229 and 230 and Reforming Unit 231 flow to Blowdown Drum F-600. Any liquid releases or entrained liquid will drop out in F-600. Liquid in F-600 gravitates to F-603 Drain Pot. On high level in F-603, blowdown pumps G-600/601 automatically start. The liquids are pumped by level control through Blowdown Slops Cooler E-600 to the foul water tank, the same foul water tank for the Refinery Relief and Blowdown System. When level in F-603 has dropped to the preset level, the pumps automatically stop.

Minor vapor releases up to 200,000 scf/hr are diverted from F-600 to the Refinery Blowdown System by a fifteen foot water seal in F-604 Water Seal Drum downstream of F-600. These minor releases flow to the Refinery Blowdown System through a 12″ cross-connecting line to the Sulfur Plant/Isomerization Unit common blowdown header. Major vapor releases break the water seal in F-604 and flow through a 42″/48″ flare header to the MP-30 Flare.

Vacuum Protection for F-600 and F-604

To prevent a vacuum, PIC-601 on F-600 adds natural gas to the MP-30 Blowdown on low pressure. In addition, the pipe entering the F-604 seal leg rises 19 feet above the top of the 15 foot water seal. Therefore, if a vacuum or partial vacuum occurs in the MP-30 blowdown system, water in F-604 will back flow up the seal pipe, but the seal will not be broken.

On low pressure in the flare header, separate pressure controller PIC-658 adds natural gas to the flare line to prevent flashback. A small continuous flow of natural gas through a restriction orifice sweeps the flare line to ensure the line does not contain any H_2S, NH_3, or other heavier hydrocarbons after flaring ceases.

MP-30 Flare F-2 Blowdown Drum (Partial spare for F-1)

When blowdown headers are lined up to F-2, any entrained liquids in the vapor releases or any liquid releases to F-2 are knocked out in F-2. F-2 is also a low point in the system. Any liquid that condenses in the 36″ header will flow back to F-2. At a high level in F-2, blowdown pumps G-2A/B automatically start and pump the collected liquid through Cooling Water Exchanger E-2 to the foul water tank. The foul water tank is the same foul water tank as listed for the Refinery Relief and Blowdown System. When a low level in F-2 is again reached, the blowdown pumps automatically stop.

Even when no Unit blowdown headers are lined up to F-2, F-2 must remain in service when the MP-30 Flare is in service. Any high level at the base of the MP-30 flare is gravity drained to F-2. The continuous purge required for the MP-30 Flare Stack to prevent flashback also flows through F-2.

MP-30 Flare Operation

The MP-30 flare operates similarly to the Main Flare. The MP-30 Flare also has four electronic spark ignited pilots. Pilot operation is basically the same as the Main Flare.

The MP-30 Flare also has a molecular seal. The flare tip is 48″diameter... Natural gas is also used as the purge gas for to prevent flashback. The continuous purge gas requirement of 0.01 ft/sec to the MP-30 Flare Stack is supplied through pressure regulator PCV-565 and flow restriction orifice FO-523 to 19F-2. The purge gas flows from 19F-2 through the 36″ flare header to the MP-30 Flare. (The minimum purge requirement of 445 SCF/hr for this flare stack is set by the manufacturer's molecular seal and flare tip design.)

In addition to the molecular seal and continuous purge, a water seal exists at the base of the flare stack to prevent flashback. The seal is designed to have a continuous water purge of 0.5 gpm. A continuous water purge ensures that any condensed hydrocarbon vapor that may accumulate is removed from the base of the

flare. The continuous water purge and/or any condensed hydrocarbon gravitate from to F-2 for removal to the foul water tank.

An on-line oxygen analyzer is located on the main 48″ flare header downstream of the 36″ F-2 flare header and 12″ D-7 header connections. The analyzer sounds an alarm on high oxygen content in the Unit 200 DCS to warn operators of potentially explosive mixtures in the MP-30 flare system.

Smokeless Flaring at MP-30 Flare

A small continuous flow of steam is provided to the flare tip to prevent a condensate build-up in the steam line and provide cooling to the flare tip. When flaring occurs, additional steam is injected at the tip to aspirate air into the flame and ensure smokeless burning of the flare gases. Flow indicators, located on the 48″ header from MP-30, the 36″ header from F-2, and the 12″ header from D-7 detect releases to the flare. These flow indicators alarm on high flowrates in the Unit 200 DCS. A monitor of the flare is also located in the Unit 200 control room; so that the Unit 200 boardman can continuously view the MP-30 flare. If there is a flow to the flare or the flare is smoking, the steam to the flare tip is manually increased by the boardman from the Unit 200 DCS.

Hot Coker Blowdown System

The Hot Coker Blowdown system was built with the Unicracker Complex in 1970. Releases to the hot Coker Blowdown System flow through a 16″ blowdown header to Blowdown Accumulator F-6. Even though the system is described as the Hot Coker Blowdown system, not all releases are hot nor are all releases from Unit 200 Coking Section. Originally, most of the releases to the blowdown system were from relief valves on heater outlets, blowdown lines from heater outlets, and the relief valves on the Unit 200 Coke Drums (hot releases in excess of 650 °F). However, other factors such as type of material released from a relief valve (i.e. crude) will also cause the relief valve to be connected to the Hot Coker Blowdown System. Other Unit 200 connections include Unit 200 Vacuum Tower relief valve, crude feed pump relief valve, various thermal relief valves for heat exchangers, and pump clean-out/ blowdown lines at Unit 200. The Unit 267 Desalter, crude pump relief valves, and Diesel Filter relief valves discharge to the Hot Coker Blowdown System as well. Although Unit 233 can relieve to either F-6 or F-3 the primary route is through F-6. This is manually controlled. During periods of fuel gas imbalance the excess clean fuel gas is vented to F-6 through the 10” line.

Liquid releases to the Hot Coker Blowdown system drop out in F-6. A high liquid alarm on F-6 that sounds on the DCS alerts the Unit 200 Operators that liquid is flowing to F-6. Operators manually start blowdown drum pump G-61 to pump the liquid to the recoverable oil tank. If the liquid is a hot release, the Operators will divert cooler gas oil from Unit 200 to the Hot Coker Blowdown header to cool the liquid release before pumping to tankage.

Any vapor that is released from F-6 flows to Blowdown Drum D-7. On high temperature in the D-7 overhead line (150 °F), a water deluge control valve automatically opens to flood water into D-7. A high temperature alarm sounds in the Unit 200 control room on the DCS and a valve positioner alarm from this control valve sounds on the Unit 200 alarm panel when the deluge valve opens. This alerts operators that a hot release has occurred and additional operator intervention may be required for D-7. Water gravitates through the water deluge control valve from Tank 286 to D-7 and condenses most of the vapor released to D-7 by contact with the vapor by flowing over the disc and donut baffles inside D-7. Any vapor not condensed will flow overhead from D-7 to one of the flares for combustion. D-7 overhead is normally lined up to the Main Flare.

The water and any entrained hydrocarbon liquid will discharge from D-7 through a water seal leg to the process sewer. During any release at the flares or to the Hot Coker Blowdown System, the pressure in D-7 will not exceed 15 psig. This water seal leg ensures that the water seal is not blown during any potential release.

Some of the condensed hydrocarbon in D-7 will separate from the water at the base of D-7. The operators manually line up D-7 bottom to the Blowdown Drum Pump G-61 to pump the hydrocarbon liquids from D-7 to the recoverable oil tank.

Gasses from the Hot Coker Blowdown system are recovered if the pressure in the blowdown does not exceed the pressure necessary to blow the water seal in the C-1 Flare Stack Water Seal Drum. Gasses are periodically sent to the flare from the Hot Coker Blowdown system. This 10” line is monitored with a separate ultrasonic meter. In 2006 there was approximately 150 hours in which flow was sent to the flare from this system. The majority of these 150 hours, approximately 90%, was during a period of fuel gas imbalance when

clean fuel gas was being sent to the flare. (Clean fuel gas is not generated from the Hot Coker Blowdown system, excess gas is routed through the 10" line upstream of where the flow is monitored).

Flare Pilots

Each stack tip has four electronic spark ignited pilots, each with its own ignition system. The pilots utilize electronic spark ignition for an automatic re-light function. When the thermocouple on the pilot senses a pilot outage (low thermocouple reading), the spark igniter immediately reacts to re-light the pilot. After a set period of time, the loss of pilot indication will alarm in the DCS in the control room.

As a back-up system to this automatic electronic spark ignition system, each pilot has a manual flame front generator line.

Temperature indicators for each pilot also alarm on low temperature in the to alert the operators that pilot flame-out has possibly occurred. If the low temperature alarm remains on because the automatic spark ignition system has not been successful to re-ignite the pilot, an operator is then dispatched to the field to manually operate the flame front generator to re-ignite the pilot.

Capacity of the Relief and Blowdown Systems

The Refinery and MP-30 flare systems are sized to handle releases during refinery-wide utility failures - refinery-wide power failure, total saltwater cooling system failure, or 150 psig steam failure. The maximum design relief case for both these flare systems is currently a refinery-wide power failure. The relief scenarios were re-evaluated as part of the 2009 CFEP. The design of an individual unit blowdown header may be based on other failures. For example the DIB blowdown header design is based on a refinery-wide salt water failure. The Unit 267 blowdown header design is based on a 150 psig steam failure.

The MP-30 blowdown system (consisting of F-600, F-604, and MP-30 blowdown header) is sized to handle releases from common utility failures for the MP-30 Complex - Units 229, 230, and 231. The two major utility failures, causing the highest relief loads, are power failure and cooling water failure. Power failure creates the highest radiation release concern in the flare area, because a refinery-wide power failure can cause both the MP-30 Flare and the Main Flare to have large releases. An MP-30 cooling water failure creates the highest back pressure in the system for certain MP-30 relief valves.

Interrelated Systems

Wet Gas Stream, process units, and compressor - The light ends section of Unit 200, Crude/Coking Unit, processes the bubble tower wet gas and bubble tower raw naphtha stream to produce a stabilized naphtha. Wet gas (high C3 – C5 content) from the bubble tower reflux drum is compressed by the G-501 Wet Gas Compressor, a multi-stage centrifugal compressor. The compressed gas is mixed with the bubble tower raw naphtha. In exchanger E-511, salt water cools the combined stream before the stream discharges into the F-502 High-Pressure Separator. Vapor from the high-pressure separator flows to the D-503 Absorber. In D-503, the vapor is contacted with a stripped lean oil which removes the heavier components from the vapor. The scrubbed off-gas from D-503 is then pressure controlled to the light ends sour fuel gas header. The combined sour fuel gas stream from the light ends section flows to Unit 233, the Refinery Fuel Gas Center.

The Flare Gas Recovery Compressor (G-503) can be put into Wet Gas Compressor (G-501) service, if needed. This is done on a planned and emergency basis. The value of this is to minimize overall flaring. The "Wet Gas" Compressor runs at a rate much higher than the Flare Gas Recovery Compressor. The Flare Gas Recovery Compressor typically runs at about 50% of the maximum flow on an annual average basis. When the Flare Gas Recovery Compressor is put into Wet Gas Compressor service the entire capacity of the Flare Gas Recovery Compressor is utilized. Although flaring will likely occur, the total rate of flaring has been minimized by approximately 2.3 MMSCFD by placing the Flare Gas Recovery Compressor into Wet Gas Compressor service.

Odor Abatement: stream, process units, and compressor – There is a group of compressors and a closed vent system referred to as the "Odor Abatement" (OA) system. The OA System is a Refinery wide collection system that includes tank blanketing, vacuum towers non-condensable vapor, de-gassing vapors from

various processes, butane tanks vents, and the iso-pentane tank vents. Seasonal ambient temperature increases will impact various processes causing an increase in flow of material to the OA System. The purpose of the system is to collect and control vapors from the sources listed above. Natural gas is purged into the system based on certain set points. Natural Gas as Blanketing Gas for tanks has been used due to low H2S/Sulfur content, nil oxygen content, consistent quality, and low molecular weight. Low molecular weight and low H_2S/Sulfur are only critical to finished low sulfur products. Nil oxygen content is critical for finished product and intermediate products to prevent formation of materials that foul preheat exchangers.

The compressors help maintain pressure in the system and maintain movement of the vapors. The vapors are routed, via the odor abatement compressors directly to Unit 233 Fuel Gas Center. The vapors are co-mingled with other recovered streams, such as the U200 Wet Gas & Flare Gas Recovery vapors, for sulfur removal.

There are 4 odor abatement compressors. Typically, one or two compressors are operating with a third one as backup. A 4th compressor was installed 2nd Quarter 2009. Following the installation of the 4th compressor, 2 to 3 compressors will typically be operated with 1 to 2 spare compressors. The Flare Gas Recovery Compressor can be put into Odor Abatement service, if needed. Without compressor(s) in odor abatement service the tanks and other equipment associated with the system may relieve to the atmosphere, resulting in potential excess emissions and odors. By utilizing the Flare Gas Recovery Compressor in Odor Abatement service, emissions directly to the atmosphere are mitigated but flaring will likely take place.

F-502**-** F-502 which is shown on the PFD shown in Attachment B is related to the Wet Gas Compressor system described above. Gasses collected and compressed in the G-501 Wet Gas Compressor are then sent to the Unit 200 F-502 High Pressure Separator. If the Flare Gas Recovery Compressor (G-503) is utilized in Wet Gas Compressor service then the Flare Gas Recovery Compressor would discharge to the F-502 separator.

ATTACHMENT C

SAN FRANCISCO REFINERY
FLARE SYSTEM PROCESS FLOW DIAGRAM

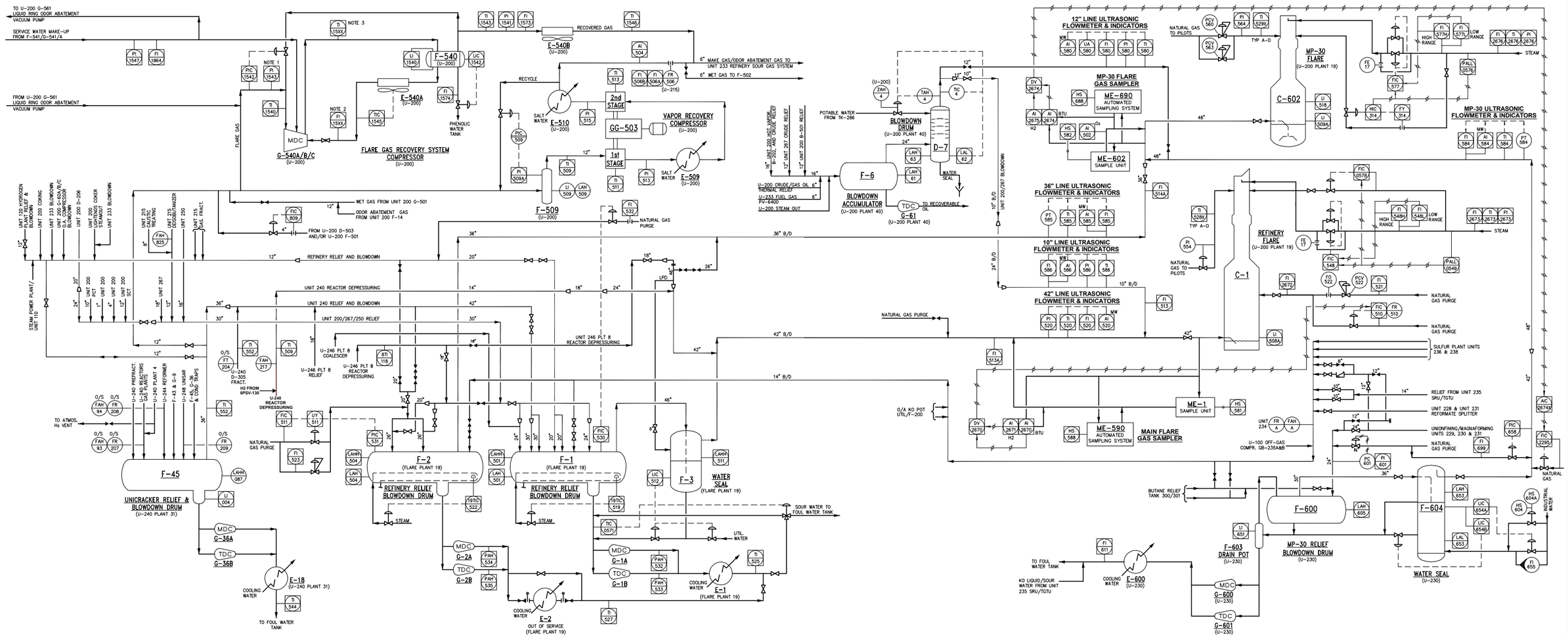

240:31F-45
RELIEF & BLOWDOWN DRUM
DIAMETER (INCHES): 132 ID x 30'-0" S/S
DESIGN: 50 PSIG @ 650° F /20 PSIG @ -50° F
INSULATION (INCHES): NONE

240:31F-18
PUMP-OUT COOLER
22.6 MM BTU/HR (DESIGN)
DESIGN: (SHELL) 160 PSIG @ 500° F
DESIGN: (TUBE) 150 PSIG @ 250° F
INSULATION (INCHES): NONE

200:19F-2
REFINERY RELIEF BLOWDOWN DRUM
DIAMETER (INCHES): 11' ID x 30'-0" T/T
DESIGN: 25 PSIG @ 650° F /10 PSIG @ -50° F
INSULATION (INCHES): NONE

200:19E-2
PUMPOUT COOLER (OUT OF SERVICE)
6.7 MM BTU/HR (DESIGN)
DESIGN: (SHELL) 150 PSIG @ 250° F
DESIGN: (TUBE) 200 PSIG @ 350° F
INSULATION (INCHES): NONE

200:19F-1
REFINERY RELIEF & BLOWDOWN DRUM
DIAMETER (INCHES): 15.5' ID x 40'-0" T/T
DESIGN: 25 PSIG @ 650° F /-15 PSIG @ 500° F/10 PSIG @ -50° F
INSULATION (INCHES): NONE

200:19F-3
WATER SEAL DRUM
DIAMETER (INCHES): 6'-0" ID x 24'-0" T/T
DESIGN: 30 PSIG @ 500° F
INSULATION (INCHES): NONE

230:E-600
BLOWDOWN SLOPS COOLER
MM BTU/HR (DESIGN)
DESIGN: (SHELL) 150 PSIG @ 500° F
DESIGN: (TUBE) 150 PSIG @ 500° F
INSULATION (INCHES): NONE

230:F-603
DRAIN POT
DIAMETER (INCHES): 60 OD x 8'-0" S/S
DESIGN: 150 PSIG @ 500° F
INSULATION (INCHES): NONE

230:F-600
KNOCKOUT DRUM
DIAMETER (INCHES): 120 ID x 29'-5" S/S
DESIGN: 28 PSIG @ 500° F
INSULATION (INCHES): NONE

230:F-604
WATER SEAL DRUM
DIA. (IN.): 144 OD x 32'-6" S/S
DESIGN: 50 PSIG @ 650° F
FULL VAC. @ 500° F
INSULATION (IN.): NONE

240:31G-36A
PUMP-OUT
DESIGN: 400 GPM @ 78 PSI ΔP
DRIVER: 60 HP/3600 RPM
SP. GR. 0.58 @ 50 °F HC
&/OR H2O 1.0 @ 650° F

240:31G-36B
PUMP-OUT (SPARE)
DESIGN: 400 GPM @ 78 PSI ΔP
DRIVER: 60 HP/3600 RPM
SP. GR. 0.58 @ 50 °F HC
&/OR H2O 1.0 @ 650° F

200:19G-2A
PUMP-OUT
DESIGN: 200 GPM @ 107 PSI ΔP
DRIVER: 60 HP/ RPM
SP. GR. 0.61 @ 450° F

200:19G-2B
PUMP-OUT
DESIGN: 200 GPM @ 107 PSI ΔP
DRIVER: 50 HP/ RPM
SP. GR. 0.61 @ 450° F

200:19G-1A
PUMP-OUT
DESIGN: 200 GPM @ 107 PSI ΔP
DRIVER: 60 HP/Y RPM
SP.GR. 0.61 @ 450° F

200:19G-1B
PUMP-OUT
DESIGN: 200 GPM @ 107 PSI ΔP
DRIVER: 50 HP/Y RPM
SP.GR. 0.61 @ 450° F

200:19E-1
PUMPOUT COOLER
6.7 MM BTU/HR (DESIGN)
DESIGN: (SHELL) 159 PSIG @ 250° F
DESIGN: (TUBE) 204 PSIG @ 350° F
INSULATION (INCHES): NONE

230:G-600
BLOWDOWN SLOPS PUMP
DESIGN: 150 ACFM @ PSI ΔP
DRIVER: 25 HP/1770 RPM
CASE 1. SP. GR. 1.0 @ 60° F
CASE 2. SP. GR. 0.63 @ 250° F

230:G-601
BLOWDOWN SLOPS PUMP (SPARE)
DESIGN: 150 ACFM @ PSI ΔP
DRIVER: 25 HP/1770 RPM
CASE 1. SP. GR. 1.0 @ 60° F
CASE 2. SP. GR. 0.63 @ 250° F

NOTES:
1. NORMAL OPERATION
GG-503 & G-561 PLUS ONE ONLY G-540 IS IN SERVICE
ALTERNATE OPERATION
G-540A,B & C IS IN SERVICE
GG-503 & G-561 OUT OF SERVICE

REFERENCE FILE (XREF) FOR THIS DRAWING IS FLRE-YF-001-001 & FLRE-YF-001-002

THIS DOCUMENT CONTAINS CONFIDENTIAL BUSINESS INFORMATION AND IS PROPRIETARY TO PHILLIPS66 COMPANY. DISTRIBUTION WITHOUT WRITTEN CONSENT OF PHILLIPS66 COMPANY IS PROHIBITED.

REV	DATE	DESCRIPTION	SFE NO.	BY	CHKD	APPD	DATE
7	PRELIM	AS BUILT, ADDED INSTRUMENTATION PER SFE	17068	MM	LMB		
6	1-16-19	AS BUILT, ADDED INSTRUMENTATION PER SFE	17068	MM	LMB		
5	4-9-18	AS BUILT, ADDED FI-580 ON D-7 OVHD TO MP30 FLARE, SFE	14146	LMB	LMB		

SIMPLIFIED PROCESS FLOW DIAGRAM REFINERY FLARE & BLOWDOWN SYSTEM RELIEF, BLOWDOWN VAPOR RECOVERY, & FLARE

PHILLIPS 66 COMPANY
San Francisco Refinery

DRAWING NUMBER: RVR-ENVRNM-YF-FLRE-001 REV: 7
ACAD NO. RVR-ENVRNM-YF-FLRE-001

FILE: P:\PD-ENVRNM-YF-FLRE-001.dwg
REV: 6/6/2018 9:41 AM
BY: MADCLAR

ATTACHMENT D

Cross Reference Index
40 CFR 63 Subpart CC

Flare Minimization Plan, BAAQMD 12-12
Phillips 66, San Francisco Refinery
BAAQMD Plant 16

40 CFR 63 Subpart CC RSR Flare Plan 63.670(o) Cross Reference Table		
Citation	**Regulation Description**	**All Flares**
63.670(o)(1)(i)	A listing of all refinery process units, ancillary equipment, and fuel gas systems connected to the flare for each affected flare.	Att A, B, C, E, M
63.670(o)(1)(ii)	An assessment of whether discharges to affected flares from these process units, ancillary equipment and fuel gas systems can be minimized or prevented during periods of startup, shutdown, or emergency releases. The flare minimization assessment must (at a minimum) consider the items in paragraphs (o)(1)(ii)(A) through (C) of this section. The assessment must provide clear rationale in terms of costs (capital and annual operating), natural gas offset credits (if applicable), technical feasibility, secondary environmental impacts and safety considerations for the selected minimization alternative(s) or a statement, with justifications, that flow reduction could not be achieved. Based upon the assessment, each owner or operator of an affected flare shall identify the minimization alternatives that it has implemented by the due date of the flare management plan and shall include a schedule for the prompt implementation of any selected measures that cannot reasonably be completed as of that date.	3.2 Fuel Gas Combustion SO2 Emissions 4.0 4.2.2.1 Att N
63.670(o)(1)(ii)(A)	Modification in startup and shutdown procedures to reduce the quantity of process gas discharge to the flare.	3.1 4.0 4.1
63.670(o)(1)(ii)(B)	Implementation of prevention measures listed for pressure relief devices in §63.648(j)(3)(ii)(A) through (E) for each pressure relief device that can discharge to the flare.	2.2.4
63.670(o)(1)(ii)(C)	Installation of a flare gas recovery system or, for facilities that are fuel gas rich, a flare gas recovery system and a co-generation unit or combined heat and power unit.	2.2.3.3, 2.2.3.4 3.1 3.2 Fuel Gas Combustion SO2 Emissions 4.2.2.1 Att L Att N
63.670(o)(1)(iii)	A description of each affected flare containing the information in paragraphs (o)(1)(iii)(A) through (G) of this section.	See below
63.670(o)(1)(iii)(A)	A general description of the flare, including whether it is a ground flare or elevated (including height), the type of assist system (e.g., air, steam, pressure, non-assisted), whether the flare is used on a routine basis or if it is only used during periods of startup, shutdown or emergency release, and whether the flare is equipped with a flare gas recovery system.	Att K
63.670(o)(1)(iii)(B)	The smokeless capacity of the flare based on a 15-minute block average and design conditions.	Att K
63.670(o)(1)(iii)(C)	The maximum vent gas flow rate (hydraulic load capacity).	Att K
63.670(o)(1)(iii)(D)	The maximum supplemental gas flow rate.	Att K
63.670(o)(1)(iii)(E)	For flares that receive assist steam, the minimum total steam rate and the maximum total steam rate.	Att K
63.670(o)(1)(iii)(F)	For flares that receive assist air, an indication of whether the fan/blower is single speed, multi-fixed speed (e.g., high, medium, and low speeds), or variable speeds. For fans/blowers with fixed speeds, provide the estimated assist air flow rate at each fixed speed. For variable speeds, provide the design fan curve (e.g., air flow rate as a function of power input).	n/a
63.670(o)(1)(iii)(G)	Simple process flow diagram showing the locations of the flare following components of the flare: Flare tip (date installed, manufacturer, nominal and effective tip diameter, tip drawing); knockout or surge drum(s) or pot(s) (including dimensions and design capacities); flare header(s) and subheader(s); assist system; and ignition system.	Att B Att C Att K
63.670(o)(1)(iv)	Description and simple process flow diagram showing all gas lines (including flare waste gas, purge or sweep gas (as applicable), supplemental gas) that are associated with the flare. For purge, sweep, supplemental gas, identify the type of gas used. Designate which lines are exempt from composition or net heating value monitoring and why (e.g., natural gas, gas streams that have been demonstrated to have consistent composition, pilot gas). Designate which lines are monitored and identify on the process flow diagram the location and type of each monitor. Designate the pressure relief devices that are vented to the flare.	Att C Att J
63.670(o)(1)(v)	For each flow rate, gas composition, net heating value or hydrogen concentration monitor identified in paragraph (o)(1)(iv) of this section, provide a detailed description of the manufacturer's specifications, including, but not limited to, make, model, type, range, precision, accuracy, calibration, maintenance and quality assurance procedures.	2.2.4
63.670(o)(1)(vi)	For each pressure relief device vented to the flare identified in paragraph (o)(1)(iv) of this section,	2.2.5

40 CFR 63 Subpart CC RSR Flare Plan 63.670(o) Cross Reference Table		
Citation	**Regulation Description**	**All Flares**
	provide a detailed description of each pressure release device, including type of relief device (rupture disc, valve type) diameter of the relief device opening, set pressure of the relief device and listing of the prevention measures implemented. This information may be maintained in an electronic database on-site and does not need to be submitted as part of the flare management plan unless requested to do so by the Administrator.	Att J
63.670(o)(1)(vii)	Procedures to minimize or eliminate discharges to the flare during the planned startup and shutdown of the refinery process units and ancillary equipment that are connected to the affected flare, together with a schedule for the prompt implementation of any procedures that cannot reasonably be implemented as of the date of the submission of the flare management plan.	3.1 4.0 4.1

ATTACHMENT E

Phillips 66
San Francisco Refinery, Rodeo, CA
Unit List

Unit Number	Unit Description
40	Raw Materials Receiving Unit
76	Gasoline Blending Unit
80	Refined Oil Shipping Unit
100	Process Water Unit
110	Hydrogen Plant
120	Hydrogen Plant (new in 2009, 3rd party operated by Air Liquide)
200	Coking Unit
200	Relief and Blowdown System
215	Gasoline Fractionation and Deisobutanizer, and Caustic Treating Unit
228	Isomerization Unit
229	Mid-Barrel Unionfining Unit
230	Naphtha Unionfining Unit
231	Magnaforming Unit
233	Fuel Gas Center
235	Sulfur Unit (new in 2009)
236	Sulfur Unit
238	Sulfur Unit
240	Unicracking Unit
244	Reforming Unit
246	Heavy Oil Hydrocracker (new in 2009)
248	Unisar Unit
250	Diesel Hydrotreating Unit
267	Crude Distillation Unit
MTC	Marine Terminal Complex
SPP	Steam Power Plant
---	Relief and Blowdown System

ATTACHMENT F

SAN FRANCISCO REFINERY

FLARE MINIMIZATION PROCESS FLOWCHART

Flare Minimization Flowchart

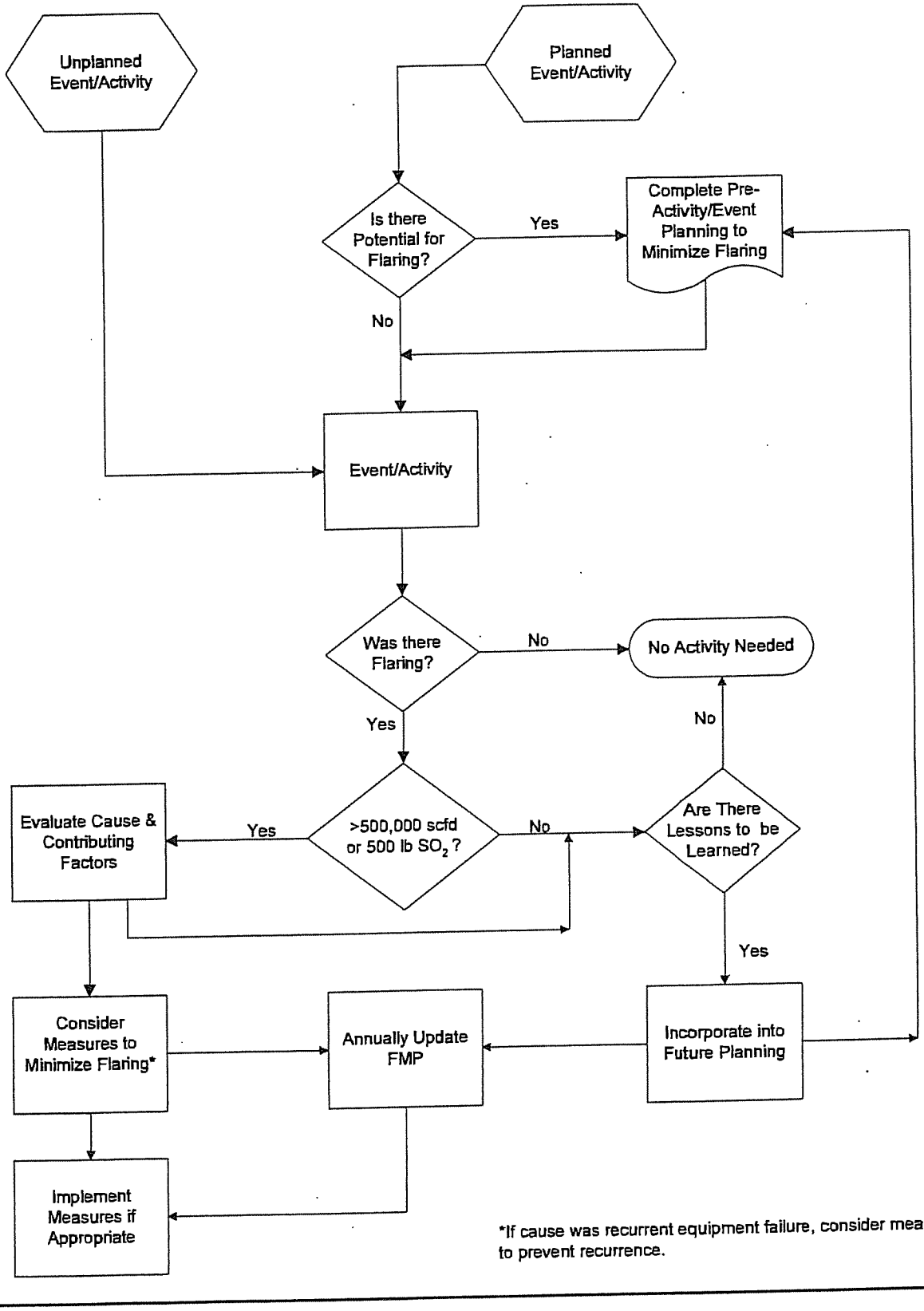

*If cause was recurrent equipment failure, consider means to prevent recurrence.

ATTACHMENT G

TYPICAL FLARE GAS RECOVERY SYSTEM

Typical Flare Gas Recovery System

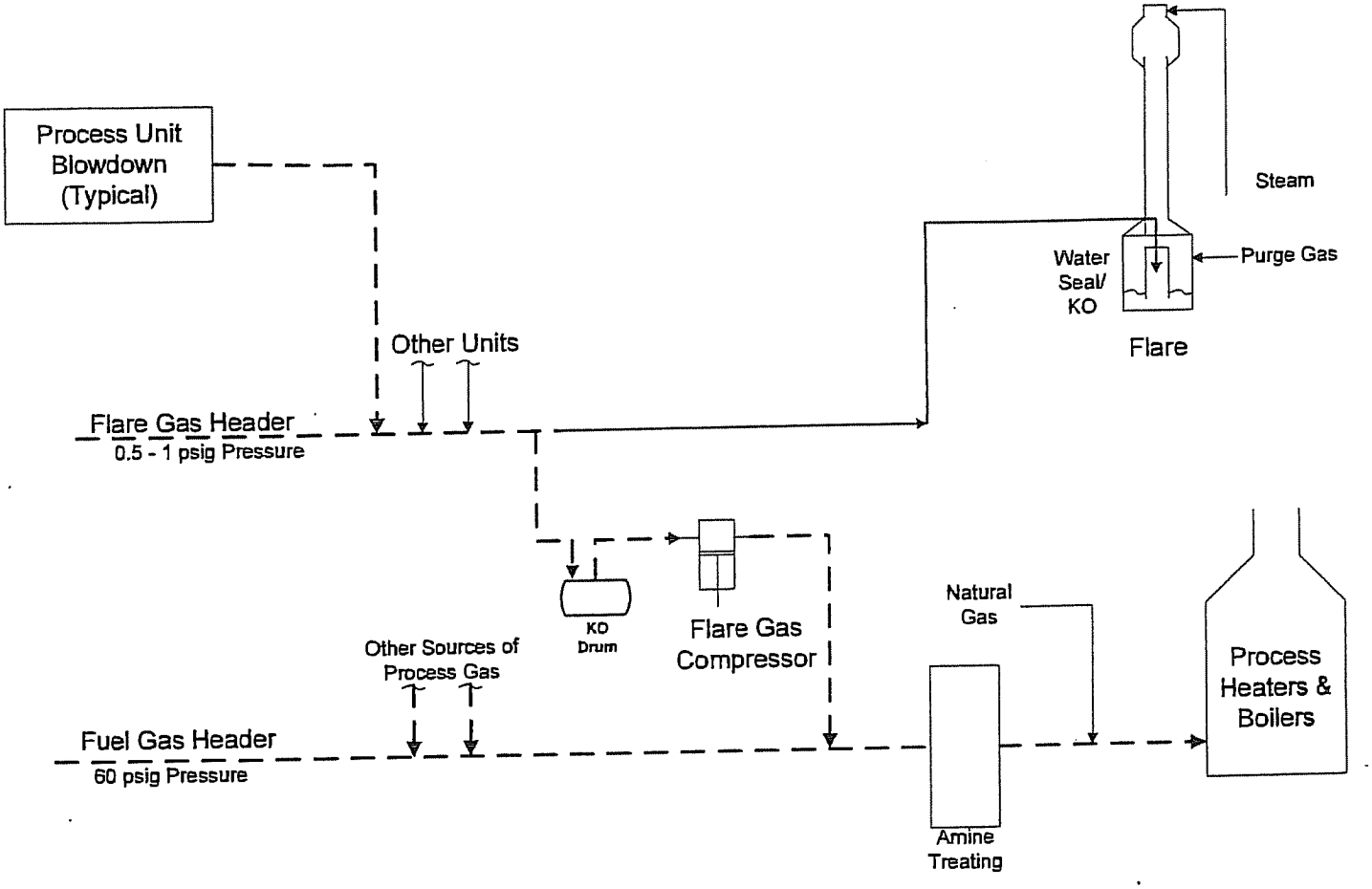

Legend

Normal Flare Gas Recovery Flow Path

ATTACHMENT H

SAN FRANCISCO REFINERY
FLARING EVENT OVERVIEW & CATEGORIZATION

Flare Minimization Plan, BAAQMD 12-12
Phillips 66, San Francisco Refinery
BAAQMD Plant 16

Historic Flaring Trends - Post Flowmeter Installation

Year	Total Flow (MMSCF/Y)	Events Requiring RCA (MMSCF)	Events Requiring RCA (% of Total Flow)	All Others (MMSCF)
2004	234	231	98.51%	3.50
2005	58	55	94.39%	3.28
2006	71	68	95.85%	2.93
2007	43	42	96.93%	1.33
2008	24	21	87.85%	2.95
2009	159	139	87.55%	16.53
2010	37	30	81.70%	6.68
2011	51	44	86.95%	6.60
2012	150	111	74.01%	38.98
2013	21	10	48.08%	10.86
2014	14	11	78.65%	2.93
2015	70	60	85.52%	10.12
2016	50	46	92.46%	3.73
2017	9	7	81.60%	1.63
2018	6	4	56.99%	2.74
2019 to date	4.0	3	68.06%	1.29

Small Event Evaluation

Flare Gas Compressor (G 503/G 540) Capacity Exceedance

Year	Count	(MMSCF)	% of Total Flow	% of Non-RCA Flow
2004	34	0.89	0.38%	25.38%
2005	24	0.95	1.62%	28.87%
2006	19	0.27	0.39%	9.29%
2007	32	0.19	0.43%	13.96%
2008	64	1.43	5.87%	48.36%
2009	34	0.45	0.28%	2.71%
2010	24	0.33	0.92%	5.01%
2011	5	0.33	0.65%	4.97%
2012	8	0.14	0.10%	0.50%
2013	3	0.08	0.60%	0.80%
2014	0	0.00	0.00%	0.00%
2015	0	0.00	0.00%	0.00%
2016	0	0.00	0.00%	0.00%
2017	4	0.10	0.00%	0.00%
2018	0	0.00	0.00%	0.00%
2019 to date	0	0.00	0.00%	0.00%

Fuel Gas Imbalance (<500,000 scfd)

Year	Count	(MMSCF)	% of Total Flow	% of Non-RCA Flow
Not individually tracked in past years.				
2009	15	12.38	7.81%	74.89%
2010	34	5.10	13.97%	76.34%
2011	23	2.21	4.37%	33.48%
2012	44	46.18	30.90%	16.20%
2013	16	2.22	17.30%	9.30%
2014	15	1.23	8.96%	41.95%
2015	58	8.38	11.99%	82.79%
2016	19	1.12	2.25%	29.91%
2017	6	0.98	11.03%	59.94%
2018	3	0.10	1.63%	3.80%
2019	6	0.20	4.98%	15.58%

Note: Small event analysis only goes through June 2018. This will be updated during the Annual BAAQMD re-submittal for July 2018-June 2019

All flare activity is carefully logged and the cause recorded in the majority of cases. This data is utilized to identify trends as well as tracking which flare events require Root Cause Analysis. This tracking tool helps to provide a means for analyzing the cause of all flaring. For the past few years for small events (<500,000 scfd) the majority of these events fell into two categories; 1) brief fuel gas recovery compressor capacity exceedances, 2) fuel gas imbalance. Listed below are a discussion of those categories of flaring.

A review of past flaring volumes since the installation of flowmeters was conducted. Based on the review, events which require RCA's per 12-12 constitute on average +80% of the total flow to the flare on an annual basis. A review of the events which don't require RCA was conducted per BAAQMD's request. In the past, the category with the most number of similar events is Fuel Gas Recovery Compressor Capacity Exceedances, but there has beennone of these events since 2014.

For 2011 - 2017 the highest category of small, non-RCA, events is fuel gas imbalance. In 2018 (year to date) there's only been one instance of this occurring. This typically occurs when fired sources such as heaters have been shutdown and there is excess fuel gas produced at the units. A tool was developed to assist in mitigating imbalances when possible and is described in the "Changes Made to Reduce Flare Emissions" under "Fuel System Diagnostic Tools – Developed tools for better fuel flow monitoring & optimization capability". In December 2011 a permit was submitted to change the Steam Power Plant (SPP) permit limit to allow for a higher ratio of refinery fuel gas to be combusted during periods of fuel gas imbalance. The permit application is pending review by BAAQMD and a U.S. EPA applicability determination. The potential LPG permit project will also help in reducing flaring due to fuel gas imbalance. In 2013, 2014 and 2015, efforts were made to reduce the materials entering into the fuel gas recovery system which helps reduce periods of potential fuel gas imbalance.

In 2012 and 2013 there were separate instances of leaking relief valves to the flare. The valve discovered leaking in 2012 had to be repaired on-line. In 2013 the leaking relief valve was reset through some operational moves. In both 2012 and 2013 the leaking relief valves constituted the highest volume of non-RCA flaring.

In 2017 the small, non-RCA events have been related to process upset or unit start up and shudown. In 2017 there were a few, brief periods of flare activity related to flare gas compressor capacity exceedances.

Attachment H

Prevention Measures
Listed in Causal Analysis Submitted to BAAQMD
& Recurrent Failure Analysis

Date	Process or Equipment Item	Flaring Event Description	Root Cause Finding	Action Item(s)	Proposed Dates/Status	Duration, Flow & Emissions	Consistency with Flare Minimization Plan (12-12-406.3)	ESDR No. Recurrent Failure?
1/18/13	U246 Unplanned Shutdown due to failure of 8G-826B Forced Draft Fan	On January 8, 2013, the Unit 246 Heavy Gas Oil Hydrocracker had an unscheduled shutdown. During the shutdown, the refinery's G-503 flare gas recovery compressor was taken offline due to gas quality concerns due to the large amount of hydrogen being sent to the flare gas recovery system. The G-503 flare gas recovery compressor does not operate properly with high amounts of hydrogen and can be permanently damaged. Two of the liquid ring compressors were in operation, but could not compress all of the gas being sent to the flare. This resulted in the flaring of unscrubbed gas.	VFD Cabinet High Temperature	Install exhaust fans in the enclosure to direct hot air out of the enclosure.	COMPLETED 4/10/13	Duration:9 hours Flow: 227 MSCF Emissions SO2 – 970 lbs (H2S = 2.64 %) NMHC – 183 lbs Methane – 46 lbs	• Upset/Malfunction - Loss of Forced Draft Fan, 8G-826B (4.2.1.4) • Maintenance, Turnaround, Startup, and Shutdown (4.2.1.1)	071-13 N
			D-803 Overhead Offgrade to blowdown during Startup	1. Revise startup procedure to notify Unit 200 when D-803 is going to blowdown. Unit 200 may be able to delay drum switches and work to optimize flow to the flare gas system. 2. Revise startup procedure to include increased D-803 Overhead sampling frequency to once per hour. This will allow the on grade determination to be made more quickly and reduce the time the material goes to blowdown. 3. Revise startup procedure to increase maximum D-803 Overhead on-grade specification to 5 ppm total sulfur from 2 ppm to minimize the time the material goes to blowdown.	COMPLETED 2/4/13 COMPLETED 2/4/13 COMPLETED 2/4/13			

ESDR No. – Internal document tracking number.
Recurrent Failure – Flaring caused by the recurrent failure of air pollution control equipment, process equipment, or a process to operating in a normal or usual manner. Recurrent is two times or more in a 5 year period. (BAAQMD 12-12-401.4.3)

Attachment H

Date	Process or Equipment Item	Flaring Event Description	Root Cause Finding	Action Item(s)	Proposed Dates/Status	Duration, Flow & Emissions	Consistency with Flare Minimization Plan (12-12-406.3)	ESDR No. Recurrent Failure?
4/11/13	U246 Unplanned Shutdown due to G801 Charge Pump Failure	On April 10, 2013, the Unit 246 Heavy Gas Oil Hydrocracker had an unscheduled shutdown. As part of the unit shutdown the unit was depressured. The depressured material was vented directly to the MP-30 Flare and resulted in the flaring of unscrubbed gases.	1. Routine equipment rounds did not include explicit instructions regarding G-801 motor oil levels and related parameters	Update the Operator Rounds sheets to include explicit instructions to check the G-801 motor oil level gauges, temperature of oil supply tubing at each branch from the header pipe, levels in constant level oiler, oil return flow rate and bearing housing air-purged seal air pressure each shift.	COMPLETED 5/2/13	Duration:7 hours Flow: 1,167 MSCF Emissions SO2 – 814 lbs (H2S = 0.42 %) NMHC – 127 lbs Methane – 210 lbs	• Upset/Malfunction – Equipment failure which results in an immediate or controlled unit shutdown (e.g. charge pump failure) (4.2.1.4) • Maintenance, Turnaround, Startup, and Shutdown – Equipment Preparation for Maintenance, Depressuring and Purging	162-13 N
			2. No back up oil supply in the event the supply orifice becomes blocked.	Install an additional level gauge and a constant level oiler on the G-801 motor's bearing housings to allow changes in oil level to be more apparent to Operators, and to provide a back up supply of oil in the event the flood lube supply orifice is blocked.	COMPLETED 4/20/13			
6/10/13	Removal of RFG A Feed to Air Liquide due to Presence of Atomized Oil	On June 10, 2013, the Air Liquide Hydrogen Plant located next to the refinery experienced a sudden increase in differential pressure in its coalescer filter. Feed gas referred to as RFG A flows through the coalescer from the Phillips 66 Rodeo Refinery to the Air Liquide Hydrogen Plant and then on to its Hydrogen Reformer. At approximately 11:00 AM RFG A was shutout by Air Liquide. This resulted in flaring of scrubbed gases. During the upset, flow from the Unicracker D-301 Debutanizer triggered an alarm. Flow was diverted from the Unit 233 Fuel Gas System to the flare to respond to the alarm and to minimize additional unit impacts. This resulted in the flaring of unscrubbed gases. Flaring occurred intermittently from June 10 through June 11, 2013 at 9:25 PM.	1. 4-PIC-176 Incorrect Calibration and Erroneous Pressure Indication	1. Re-calibrate 4-PIC-176. 2. Update 4-PIC-176 calibration documentation to reflect necessary pressure offset adjustment for glycol filled leg. . 3. Consider adding a 4-PIC-176 low pressure alarm set at 145 psig.	1. COMPLETED 6/28/13 2. COMPLETED 8/26/13 3. COMPLETED 9/6/13. Low pressure alarm was added as originally premised.	Duration:22 hours Flow: 1,818 MSCF Emissions SO2 – 786 lbs (H2S = 0.27 %) NMHC – 1,516 lbs Methane – 348 lbs	• Reduced Consumption of Fuel Gas (4.2.1.3) • Upset/Malfunction (4.2.1.4) - Failure of Instrumentation • Upset/Malfunction (4.2.1.4) – fuel gas quality upsets	227-13 N
			3. 5-FIC-015 Conservative High Flow Alarm Set Point -	Adjust 3 FIC 015 High Flow Alarm Set Point from 2.5 MMSCFD to 5 MMSCFD to allow for more sour gas to be vented to U233 fuel gas system rather than to blowdown.	COMPLETED 7/30/13			
			4. Air Liquide Coalescer Location -	Meet with Air Liquide to discuss possibility of relocating existing coalescer on RFG A to upstream of 120-FIC-115 control valve or to provide a new Knock Out vessel upstream of 120-FIC-115.	COMPLETED 8/15/13.			

ESDR No. – Internal document tracking number.
Recurrent Failure – Flaring caused by the recurrent failure of air pollution control equipment, process equipment, or a process to operating in a normal or usual manner. Recurrent is two times or more in a 5 year period. (BAAQMD 12-12-401.4.3)

Attachment H

Date	Process or Equipment Item	Flaring Event Description	Root Cause Finding	Action Item(s)	Proposed Dates/Status	Duration, Flow & Emissions	Consistency with Flare Minimization Plan (12-12-406.3)	ESDR No. Recurrent Failure?
7/3-5/2013	Unit 110 Hydrogen Plant Unplanned Shutdown	On July 3, 2013, the Unit 110 Hydrogen Plant (U110) experienced an unscheduled shutdown. The U110 shutdown resulted in the shutdown of the Air Liquide Hydrogen Plant. The loss of hydrogen from U110 and Air Liquide also resulted in multiple refinery process unit upsets and the flaring of scrubbed and unscrubbed gases during the shutdown and subsequent startup of these units.	PV-79D Valve Actuator Failed	1. Have manufacturer conduct failure analysis. 2. Inspect all PSA Valve Actuators. 3. Conduct study to determine if all 10 PSA "D" valves should be replaced 4. Controls upgrade to allow feed rate at unit to automatically change with PSA bed operation changes.	1. COMPLETED 12/18/13 2. COMPLETED 12/18/13 3. COMPLETED 7/14/16 4. COMPLETED August 2014	Duration:37.6 hours Flow: 7,767 MSCF Emissions SO2 – 17,035 lbs (H2S = 1.32 %) NMHC – 5,002 lbs Methane – 1,382 lbs	• Upset/Malfunction (4.2.1.4) – failure of PSA valve • Upset/Malfunction (4.2.1.4) – High volumes of hydrogen in the flare gas recovery system • Upset/Malfunction (4.2.1.4) – Unplanned/sudden shutdown of 3rd party Hydrogen Plant • Reduced Consumption of Fuel Gas (4.2.1.3) – fuel consumers are shutdown • Upset/Malfunction (4.2.1.4) – fuel gas quality upsets	241-13 N
			Air Liquide Feed Gas Compressor Seal Vent Pressure Set Point Too Low	Increase the set point from 22.8 psig to 33 psig.	COMPLETED 7/15/13			
6/1/2014	Unit 240 Plant 3 Instrument Upset	On June 1, 2014, an upset occurred at the Unicracker Plant 3 that affected the Refinery Fuel Gas "A" (RFG A) that is sent to the nearby third party Air Liquide Hydrogen Plant. Due to pressure and specific gravity fluctuations of the RFG A during the incident, Air Liquide shutout the RFG A gas as feed to their process. This resulted in the flaring of refinery fuel gas at the refinery. In addition, due to potentially high pressure in the fuel gas system, the G-503 Flare Gas Recovery Compressor was shutdown. This resulted in the flaring of scrubbed and unscrubbed gases	No alarms to indicate where the initial upset occurred. 3FIC019 showed flow even though valve was closed due to inaccurate meter reading (3FIC019 showed a reading of 11,500 BPD while valve output was 0%)	1. 3FIC019 immediate repair and restoration of accurate reading. 2. Set a low level output alarm for 3FIC019.OP. 3. Consider lowering high level alarm for 3LIC008 and associated level setpoint control.	1. COMPLETED June 1, 2014 2. COMPLETED 7/23/14 3. COMPLETED 7/23/14	Duration:6.83 hours Flow: 1,504 MSCF Emissions SO2 – 3,800 lbs (H2S = 1.52 %) NMHC – 1,041 lbs Methane – 224 lbs	• Reduced Consumption of Fuel Gas (4.2.1.3) • Upset/Malfunction (4.2.1.4) – fuel gas quality upsets • Emergency (4.2.1.5) – Local H_2S alarms near D-7 drum	225-14 N
			Inaccurate 3FIC019 reading and 3LIC008 level indicator float sticking - Conduct cleaning and calibration for 3FIC019 and other meters. Consider comprehensive review of Plant 3/RFG A system steam tracing.	Consider options for safe, routine cleaning of 3LIC008.	COMPLETED 9/23/14.			
			Air Liquide removal of RFG A from process feed. -.	Discuss strategies with Air Liquide for when RFG A feed is stopped to minimize impact to the Refinery fuel gas system	COMPLETED 9/9/2014			
			Sour water from D-7 automatically flushes to an open process sewer that can cause an H2S alarm - Initiation of a project to re-route the Unit 233 pressure	1a. Implement a project to re-route the Unit 233 pressure control valve flare system tie-in location. Install a tie-in location directly to the flare line downstream of 19F-3. (Connected with additional past Flare RCA's).	COMPLETED 12/2016 Relocated continuous purge on D-7			

ESDR No. – Internal document tracking number.
Recurrent Failure – Flaring caused by the recurrent failure of air pollution control equipment, process equipment, or a process to operating in a normal or usual manner. Recurrent is two times or more in a 5 year period. (BAAQMD 12-12-401.4.3)

Attachment H

Date	Process or Equipment Item	Flaring Event Description	Root Cause Finding	Action Item(s)	Proposed Dates/Status	Duration, Flow & Emissions	Consistency with Flare Minimization Plan (12-12-406.3)	ESDR No. Recurrent Failure?
			control valve flare system tie-in location.					
9/25/2014	Unit 246 B-801 A/B Heater Shutdown	On September 25, 2014, the Unit 246 Heavy Gas Oil Hydrocracker had an upset which led to a brief, unscheduled, shutdown and subsequent startup of the Unit 246 B-801 A/B heater. During the shutdown, and subsequent startup, the refinery's flare gas recovery system could not compress all of the gas being sent to the flare. This resulted in the flaring of unscrubbed gas.	G-826A speed transmitter, ST-313A, failure	Replace ST-313A	COMPLETED 10/2014	Duration: 3.0 hours Flow: 320 MSCF Emissions SO2 – 895 lb (H2S = 1.7%) NMHC - 174 lb CH4 – 47 lb	• Upset/Malfunction - Loss of Forced Draft Fan, G-826A (4.2.1.4) • Upset/Malfunction – Failure of instrumentation to function as designed (4.2.1.4) • Maintenance, Turnaround, Startup, and Shutdown (4.2.1.1)	341-14 N
9/30 – 10/1/2014	Removal of RFG A Feed to Air Liquide	On September 30, 2014 the third-party Air Liquide Hydrogen Plant took their feed gas coalescer out of service for a filter replacement. The differential pressure on the coalescer filter had been increasing. The filter replacement is done on a periodic basis to prevent a sudden increase in differential pressure. Feed gas referred to as RFG A flows through the coalescer from the Phillips 66 Rodeo Refinery to the Air Liquide Hydrogen Plant and then on to its Hydrogen Reformer. At approximately 10:50 AM RFG A was shutout by Air Liquide. This resulted in flaring of scrubbed gases due to fuel gas imbalance.	Air Liquide removal of RFG A from process feed.	Phillips 66 communicated with Air Liquide regarding the filter replacements. Phillips 66 and Air Liquide discussed having better communication prior to Air Liquide conducting the filter replacements and notifying appropriate refinery personnel so that flaring can be minimized or eliminated.	COMPLETED 10/2014	Duration: 27.58 hours Flow: 1,510 MSCF Emissions SO2 –142 lb (H2S = 0.06 %) NMHC - 1208 lb CH4 –289 lb	• Reduced Consumption of Fuel Gas (4.2.1.3) – Third Party Hydrogen Plant planned or unplanned maintenance on feed filters	342-14 Y
10/23/2014	Unit 240 Plant 2 Unplanned Shutdown	On October 23, 2014, Unit 240 Plant 2 had an upset which led to an unscheduled shutdown. At approximately 9:45 am, several alarms (common trouble, accelerometer and high vibration) occurred at the G-203A Hydrogen Makeup compressor. At 9:47 am, the G-203A machine was shut down and feed was pulled from the Unit. As part of the designed shutdown procedure, Unit 240 Plant 2 was depressured directly to the flare, bypassing the refinery's flare gas recovery system. During the depressuring process, the large amount of hydrogen from the Unit could cause fuel gas quality issues if it were sent to the flare gas recovery system, therefore the flare gas recovery system is bypassed. This resulted in the flaring of unscrubbed gas.	Failure of G-203A Hydrogen Makeup compressor second stage piston rod due to inadequate design.	Mitigate failure risk by eliminating flaw in heater hole by reducing stress riser; radius the bottom of the heater hole. Evaluate replacing the piston rods with the newer design.	COMPLETED 1/15/16	Duration: 7.1 hours Flow: 2,264 MSCF Emissions SO2 –2026 lb (H2S = 0.54 %) CH4 - 413 lb NMHC – 1313 lb	• Upset/Malfunction - Loss of Other Compressors, G-203A (4.2.1.4) • Maintenance, Turnaround, Startup, and Shutdown (4.2.1.1)	369-14 N

ESDR No. – Internal document tracking number.
Recurrent Failure – Flaring caused by the recurrent failure of air pollution control equipment, process equipment, or a process to operating in a normal or usual manner. Recurrent is two times or more in a 5 year period. (BAAQMD 12-12-401.4.3)

Attachment H

Date	Process or Equipment Item	Flaring Event Description	Root Cause Finding	Action Item(s)	Proposed Dates/Status	Duration, Flow & Emissions	Consistency with Flare Minimization Plan (12-12-406.3)	ESDR No. Recurrent Failure?
		In addition, during the upset, there were periods when the refinery's fuel gas system was out of balance and excess fuel gas was sent to the flare. This resulted in the flaring of scrubbed gas.						
			Ineffective internal systems to ensure product reviews are reviewed for action.	Communicate the issue of product safety notices from Original Equipment Manufacturers to the Phillips 66 QA / QC manager.	COMPLETED 12/15/14			
			Incomplete Operations notifications for Piston Rod Loading	Review and update notifications and alarming to prevent exceeding the maximum rod load of reciprocating compressors.	COMPLETED 8/24/15			
10/25 – 27/2014	Unit 240 Plant 2 Scheduled Maintenance	The primary cause of flaring was the Unit 240 Plant 2 reactors were being nitrogen purged in order to clear the reactors in preparation for planned maintenance and human entry. As part of the shutdown procedure, the unit was depressured directly to the flare, bypassing the refinery's flare gas recovery system by design. During depressuring, the large amount of hydrogen and nitrogen from the Unit could cause fuel gas quality issues if it were sent to the flare gas recovery system. This resulted in the flaring of gases containing mainly hydrogen or nitrogen with no significant sulfur. The reactor beds go through a hydrogen purge in which the excess hydrogen is sent directly to the flare. This purge is followed by a nitrogen purge which further removes VOCs from the catalyst bed in order to cool down the beds and make them safe for entry.	No prevention measures were identified in relation to the purging of the Unit 240 Plant 2 reactors because this activity is included in the Flare Minimization Plan (Section 4.2.1.1).	N/A	N/A	Duration: 51.25 hours Flow: 1,857 MSCF Emissions SO2 –202 lb (H2S = 0.01 %) NMHC - 281 lb CH4 – 94 lb	• Equipment Preparation for Maintenance – Depressurization of Equipment & Pressurization of Equipment with Nitrogen (Section 4.2.1.1).	358-14 N
10/29 -30/2014	Tank 205 Overfill and Odor Abatement System Compressors Shutdown	The primary cause of the flaring was that the G-503 flare gas recovery compressor was put into service as an OA compressor due to the failure of the OA system (A7) compressors. While G-503 was in OA service, there was insufficient capacity in the flare gas recovery system to recover all of the gases and the flaring of unscrubbed gas occurred. On October 29th, 2014, at approximately 1:25 pm, the OA system compressors shutdown. Excess liquid discovered in the line leading to the F-14 Knockout Pot in	Tank 205 Varec Level Gauge Failure	1. Install Radar Level Gauge to Provide Independent Level Verification 2. Implement a Reliability Program for Tank Gauging that Includes Planned Maintenance	1. COMPLETED 12/8/15 2. COMPLETED 1/2016	Duration: 51.25 hours Flow: 3,580 MSCF Emissions SO2 – 12,245lb (H2S = 2.1 %) NMHC - 1,488 lb CH4 –791 lb	• Upset/Malfunction - Loss of Odor Abatement Compressors (4.2.1.4) • Upset/Malfunction – Loss of Flare Gas Compressor – High Liquid Level (4.2.1.4)	375-14 N

ESDR No. – Internal document tracking number.
Recurrent Failure – Flaring caused by the recurrent failure of air pollution control equipment, process equipment, or a process to operating in a normal or usual manner. Recurrent is two times or more in a 5 year period. (BAAQMD 12-12-401.4.3)

Attachment H

Date	Process or Equipment Item	Flaring Event Description	Root Cause Finding	Action Item(s)	Proposed Dates/Status	Duration, Flow & Emissions	Consistency with Flare Minimization Plan (12-12-406.3)	ESDR No. Recurrent Failure?
		the OA system caused the OA compressors to shut down. As a result of the OA compressor shutdowns, pressure built up in several of the OA tanks causing them to exceed their atmospheric relief pressures. In order to minimize any potential odor impacts, the odor abatement flow was diverted to the flare system by putting the G-503 flare gas recovery compressor into OA service. During the period when the OA system was in an upset condition, there were no complaints received from the community. Phillips 66 maintenance crews were scheduled around the clock to repair the OA system. The liquid discovered in the OA system was determined to have originated from Tank 205, which stores sour water and slop oil. On October 29, the liquid in Tank 205 was filled to a level where the liquid could enter the OA system due to a faulty Varec gauge tank level reading. The Varec gauge is the instrument used to measure the level of the liquid in the tank and also provide alarms at predetermined liquid levels in the tank to ensure safe operation. The level reported by the Varec gauge was determined to be reporting a value at least 4 feet lower than the actual level in the tank on October 29. This led to Tank 205 being overfilled and liquid entering the OA system.						
			Hand Gauging of Tank 205 Level Inaccurate	Review, Modify and Improve Initial and Refresher Training and Operating Procedures for Hand Gauging	COMPLETED 12/11/16			
1/25-2/4/2015	Unit 246 Unplanned Shutdown – G-802 Compressor	On January 25, 2015, the Unit 246 Heavy Gas oil Hydrocracker (U246) shut down due to an unplanned shutdown and malfunction of the G-802 hydrogen gas recycle compressor (G-802). As part of the U246 shutdown procedure, gases are vented directly to the MP-30 flare, bypassing the flare gas recovery system. During this period, unscrubbed gas is sent to the flare. Due to the G-802 compressor being shutdown, the U246 reactors could not be cooled normally using G-802 to recycle gas through the system to cool	0.5 amp fuse not properly sized for reliable service	1. Replace 0.5 amp fuse with 2.0 amp fuse 2. Review all other fuses associated with this control system and panel for proper sizing. Replace improperly sized fuses as necessary.	1. COMPLETED 1/26/15 2. COMPLETED 1/26/15	Duration: 165 hours Flow: 14,247 MSCF Emissions SO2 – 975 lb (H2S = 0.04%) NMHC – 2272 lb CH4 – 2244 lb	• Upset/Malfunction – Equipment failure which results in an immediate or controlled unit shutdown (e.g. recycle compressor failure) (4.2.1.4) • Maintenance, Turnaround, Startup, and Shutdown – Equipment Preparation for Maintenance, Depressuring and Purging (4.2.1.1)	080-15 Y

ESDR No. – Internal document tracking number.
Recurrent Failure – Flaring caused by the recurrent failure of air pollution control equipment, process equipment, or a process to operating in a normal or usual manner. Recurrent is two times or more in a 5 year period. (BAAQMD 12-12-401.4.3)

Attachment H

Date	Process or Equipment Item	Flaring Event Description	Root Cause Finding	Action Item(s)	Proposed Dates/Status	Duration, Flow & Emissions	Consistency with Flare Minimization Plan (12-12-406.3)	ESDR No. Recurrent Failure?
		the reactors without flaring. This process continued intermittently through February 4, 2015. The reactors were cooled by pressuring the system up with nitrogen and then depressuring the nitrogen and other gases in the reactors directly to the MP-30 flare. This results in the flaring of unscrubbed gas.						
2/4-5/2015	Unit 246 Unplanned Shutdown – G-802 Compressor Seal Leak	The primary cause of the flaring was the shutdown of the G-802 compressor at Unit 246 due to a seal leak. During the shutdown, gases are vented directly to the MP-30 flare, bypassing the flare gas recovery system and resulting in the flaring of unscrubbed gas. The shutdown of the G-802 recycle compressor was the result of a seal leak from the non-drive end (NDE) of the compressor that was identified during the startup of the compressor after maintenance. Prior to G-802 startup on February 4th, Phillips 66 personnel proactively replaced the entire compressor bundle with a warehouse spare bundle in response to a previous seal failure on the drive end (DE) of the compressor. The spare compressor bundle did not have mechanical seals installed on it so contractor millwrights specifically experienced with this type of equipment were directed to fully assemble the compressor bundle and install it in the G-802 compressor case. This work was completed prior to the event on February 4, 2015. The investigation into the NDE seal leak determined there were six missing socket head cap screws used to lock the seal rotating components around a set of split rings in order to set the seal axial position. The missing cap screws allowed a collar to move axially along the shaft when the seal gas purge supply was switched from nitrogen to recycle gas during the G-802 startup procedure. The collar contacted the bearing housing resulting in increased vibration levels for a short period of time during the startup process. As the collar contacted the bearing housing the seal moved axially and resulted in a seal leak being detected at the NDE of	G-802 dry gas seal installation procedure was not adequate.	Write a checklist procedure for dry gas seal installation on the U246 G-802 seals. Procedure should call out the appropriate seal drawing and require a craftsperson to mark each step as completed. This checklist will include all major components to install the seals including the socket head screws that were inadvertently omitted prior to the February 4th startup attempt.	COMPLETED 02/2015	Duration: 5 hours Flow: 643 MSCF Emissions SO2 –676 lb (H2S = 0.6 %) NMHC – 50 lb CH4 –80 lb	• Upset/Malfunction – Equipment failure which results in an immediate or controlled unit shutdown (e.g. recycle compressor failure) (4.2.1.4)	119-15 Y

ESDR No. – Internal document tracking number.
Recurrent Failure – Flaring caused by the recurrent failure of air pollution control equipment, process equipment, or a process to operating in a normal or usual manner. Recurrent is two times or more in a 5 year period. (BAAQMD 12-12-401.4.3)

Attachment H

Date	Process or Equipment Item	Flaring Event Description	Root Cause Finding	Action Item(s)	Proposed Dates/Status	Duration, Flow & Emissions	Consistency with Flare Minimization Plan (12-12-406.3)	ESDR No. Recurrent Failure?
		the compressor and the compressor was shutdown.						
2/14/15	Unscheduled Unit 246 Shutdown – G-802 Compressor Tube Leak	The primary cause of the flaring was the unscheduled shutdown of Unit 246 due to the instrument tubing leak which caused the shutdown of the G-802 compressor. During the shutdown, gases are vented directly to the MP-30 flare, bypassing the flare gas recovery system and resulting in the flaring of unscrubbed gas. The shutdown of the G-802 recycle compressor was the result of a single 1/2-inch stainless steel (SS) tubing-to-fitting connection (gas seal supply-line connection 246:PDI-256) failure. While Unit 246 was shutdown due to previous unscheduled events (see RCA for February 4, 2015 event), work was scheduled to disassemble instrument tubing connections between the G-802 compressor gas seal system and recycle compressor to install block valves ahead of the pressure gauges on the instrument panel. The block valves were installed to allow maintenance on the pressure gauges with G-802 in operation. However, upon startup, one of the instrument tubing-to-fitting connections failed which resulted in the release of high pressure hydrogen to atmosphere.	Phillips 66 Maintenance Procedure (MP) 2.53, *Safe Assembly of Tubing Connections Guideline,* not followed and not well understood by contractors.	1. Conduct refresher training on MP 2.53 with P66 and contractor instrument technicians, pipe fitters and machinists. 2. Audit training records for those performing instrument tubing assembly per MP 2.53 requirements	1. COMPLETED 6/26/15 2. COMPLETED 5/28/15	Duration: 1 hours Flow: 1,118 MSCF Emissions SO2 – 1,178 lb (H2S = 0.6 %) CH4 –125 lb NMHC – 77 lb		110-15 Y
			MP 2.53 requires 20% visual verification of fitting connections. The consequence of failure of a Highly Hazardous Service (defined in MP 2.53) may be very significant.	Revise MP 2.53 to require 100% visual verification of instrument tubing assemblies for all connections in Highly Hazardous Service.	COMPLETED 6/26/15			
3/5-6/15	Maintenance Gas Turbine – Fuel Gas Balance	Maintenance turnarounds were taking place on the gas turbines at the Steam Power Plant (SPP). Because the gas turbines at the SPP are large fuel gas consumers, during maintenance periods on these turbines there were periods where all of the fuel gas produced at the refinery could not be consumed. Due to the imbalance in the fuel gas system, the additional fuel gas that could not be consumed by the refinery process heaters was flared. During this period, only excess	Maintenance pre-planning was conducted that identified the potential for fuel gas imbalance. No specific prevention measures were implemented but measures were taken to minimize the quantity of material flared.	N/A	N/A	Duration: 40 hours Flow: 1422 MSCF Emissions SO2 – 15 lb (H2S = 0.01%) CH4 –272 lb NMHC –1148 lb	• Reduced Consumption of Fuel Gas – Fuel Gas Imbalance (Section 4.2.1.3)	136-15 N

ESDR No. – Internal document tracking number.
Recurrent Failure – Flaring caused by the recurrent failure of air pollution control equipment, process equipment, or a process to operating in a normal or usual manner. Recurrent is two times or more in a 5 year period. (BAAQMD 12-12-401.4.3)

Attachment H

Date	Process or Equipment Item	Flaring Event Description	Root Cause Finding	Action Item(s)	Proposed Dates/Status	Duration, Flow & Emissions	Consistency with Flare Minimization Plan (12-12-406.3)	ESDR No. Recurrent Failure?
		scrubbed fuel gas and natural gas was flared.						
3/12-14/15	Maintenance Gas Turbine – Fuel Gas Balance	Maintenance turnarounds were taking place on the gas turbines at the Steam Power Plant (SPP). Because the gas turbines at the SPP are large fuel gas consumers, during maintenance periods on these turbines there were periods where all of the fuel gas produced at the refinery could not be consumed. Due to the imbalance in the fuel gas system, the additional fuel gas that could not be consumed by the refinery process heaters was flared. During this period, only excess scrubbed fuel gas and natural gas was flared.	Maintenance pre-planning was conducted that identified the potential for fuel gas imbalance. No specific prevention measures were implemented but measures were taken to minimize the quantity of material flared.	N/A	N/A	Duration: 28 hours Flow: 2393 MSCF Emissions SO2 – 40 lb (H2S =0.01 %) CH4 –627 lb NMHC – 2193lb	• Reduced Consumption of Fuel Gas – Fuel Gas Imbalance (Section 4.2.1.3)	137-15 N
3/22/15	Maintenance Gas Turbine – Fuel Gas Balance	Maintenance turnarounds were taking place on the gas turbines at the Steam Power Plant (SPP). Because the gas turbines at the SPP are large fuel gas consumers, during maintenance periods on these turbines there were periods where all of the fuel gas produced at the refinery could not be consumed. Due to the imbalance in the fuel gas system, the additional fuel gas that could not be consumed by the refinery process heaters was flared. During this period, only excess scrubbed fuel gas and natural gas was flared.	Maintenance pre-planning was conducted that identified the potential for fuel gas imbalance. No specific prevention measures were implemented but measures were taken to minimize the quantity of material flared.	N/A	N/A	Duration: 16.5 hours Flow: 501 MSCF Emissions SO2 – 8 lb (H2S =0.01 %) CH4 –141 lb NMHC – 470 lb	• Reduced Consumption of Fuel Gas – Fuel Gas Imbalance (Section 4.2.1.3)	138-15 N
3/26/15	Maintenance Gas Turbine – Fuel Gas Balance	Maintenance turnarounds were taking place on the gas turbines at the Steam Power Plant (SPP). Because the gas turbines at the SPP are large fuel gas consumers, during maintenance periods on these turbines there were periods where all of the fuel gas produced at the refinery could not be consumed. Due to the imbalance in the fuel gas system, the additional fuel gas that could not be consumed by the refinery process heaters was flared. During this period, only excess scrubbed fuel gas and natural gas was flared.	Maintenance pre-planning was conducted that identified the potential for fuel gas imbalance. No specific prevention measures were implemented but measures were taken to minimize the quantity of material flared.	N/A	N/A	Duration: 11 hours Flow: 679 MSCF Emissions SO2 – 11 lb (H2S =0.01 %) CH4 –185 lb NMHC – 607 lb	• Reduced Consumption of Fuel Gas – Fuel Gas Imbalance (Section 4.2.1.3)	139-15 N
4/19/15	Maintenance Gas Turbine – Fuel Gas Balance	Maintenance turnarounds were taking place on the gas turbines at the Steam Power Plant (SPP). Because the gas turbines at the SPP are large fuel gas consumers, during maintenance periods on these turbines there were	Maintenance pre-planning was conducted that identified the potential for fuel gas imbalance. No specific prevention measures were implemented but measures	N/A	N/A	Duration: 12.25 hours Flow: 786 MSCF Emissions	• Reduced Consumption of Fuel Gas – Fuel Gas Imbalance (Section 4.2.1.3)	167-15 N

ESDR No. – Internal document tracking number.
Recurrent Failure – Flaring caused by the recurrent failure of air pollution control equipment, process equipment, or a process to operating in a normal or usual manner. Recurrent is two times or more in a 5 year period. (BAAQMD 12-12-401.4.3)

Attachment H

Date	Process or Equipment Item	Flaring Event Description	Root Cause Finding	Action Item(s)	Proposed Dates/Status	Duration, Flow & Emissions	Consistency with Flare Minimization Plan (12-12-406.3)	ESDR No. Recurrent Failure?
		periods where all of the fuel gas produced at the refinery could not be consumed. Due to the imbalance in the fuel gas system, the additional fuel gas that could not be consumed by the refinery process heaters was flared. During this period, only excess scrubbed fuel gas and natural gas was flared.	were taken to minimize the quantity of material flared.			SO2 – 13 lb (H2S =0.01 %) CH4 –239 lb NMHC – 741 lb		
5/18-19/15	Unscheduled Unit 240 Plant 2 Shutdown – D-203 High Temperature	On May 18, 2015, the Unit 240 Plant 2 Hydrocracker (U240) had an unplanned shut down due to a high temperature in the U240 D-203 2nd stage reactor. As part of the U240 shutdown procedure, gases are vented directly to the Main flare, bypassing the flare gas recovery system. During this period, unscrubbed gas is sent to the flare.	Failure of the D-203 TV-023 quench valve positioner.	Consider upgrading the D-203 quench valve positioners with newer design.	COMPLETED 2/19/16	Duration: 19 hours Flow: 5,676 MSCF Emissions SO2 – 10,170 lb (H2S =0.01 %) CH4 –1,132 lb NMHC – 4,487 lb		176-15 N
5/22/15	Maintenance Gas Turbine – Fuel Gas Balance	Maintenance turnarounds were taking place on the gas turbines at the Steam Power Plant (SPP). Because the gas turbines at the SPP are large fuel gas consumers, during maintenance periods on these turbines there were periods where all of the fuel gas produced at the refinery could not be consumed. Due to the imbalance in the fuel gas system, the additional fuel gas that could not be consumed by the refinery process heaters was flared. During this period, only excess scrubbed fuel gas and natural gas was flared.	Maintenance pre-planning was conducted that identified the potential for fuel gas imbalance. No specific prevention measures were implemented but measures were taken to minimize the quantity of material flared.	N/A	N/A	Duration: 19.5 hours Flow: 1590 MSCF Emissions SO2 – 26 lb (H2S =0.01 %) CH4 –405 lb NMHC – 1560 lb	• Reduced Consumption of Fuel Gas – Fuel Gas Imbalance (Section 4.2.1.3)	189-15 N
10/3/15	G-401B A-Gas Compressor Unscheduled Maintenance	On October 2, 2015, Phillips 66 noticed that proper lubrication was not getting to the G-401B compressor. This compressor is used to provide feed gas (A-Gas) to the third-party Air Liquide Hydrogen Plant, which is a large consumer of fuel gas. Due to the loss of proper lubrication, the G-401B compressor needed to be shut down while repairs were made to the lube oil system. During the shutdown of this compressor, the A-Gas normally sent to Air Liquide had to be consumed at the refinery. Due to the imbalance in the fuel gas system, the additional A-Gas that could not be consumed by the refinery process heaters was flared. During this period, only excess scrubbed fuel gas was flared.	G-401B Compressor Lube Oil System Failure	The lube oil system was cleaned out and the filter was replaced.	COMPLETE 10/3/15	Duration: 15 hours Flow: 1252 MSCF Emissions SO2 – 20 lb CH4 – 535 lb NMHC – 650 lb	• Reduced Consumption of Fuel Gas – Fuel Gas Imbalance (Section 4.2.1.3)	352-15 N

ESDR No. – Internal document tracking number.
Recurrent Failure – Flaring caused by the recurrent failure of air pollution control equipment, process equipment, or a process to operating in a normal or usual manner. Recurrent is two times or more in a 5 year period. (BAAQMD 12-12-401.4.3)

Attachment H

Date	Process or Equipment Item	Flaring Event Description	Root Cause Finding	Action Item(s)	Proposed Dates/Status	Duration, Flow & Emissions	Consistency with Flare Minimization Plan (12-12-406.3)	ESDR No. Recurrent Failure?
11/2–4/15	PG&E Voltage Sag – Unit 246 and U240 Plant 2 Shutdown	On November 2, 2015 at approximately 4:10 PM a PG&E transmission line had a fault caused by lightning in the area. The fault led to a voltage sag in a portion of the power provided to the Refinery. As a result of the voltage sag, the Unit 240 Plant 2 G-201 Charge Pump (G-201) and the Unit 246 G-803 A and B H_2 Recycle Compressors (G-803 A/B) shutdown. The loss of G-201 caused a shutdown of Unit 240 Plant 2. During shutdown of Unit 240 Plant 2, unscrubbed gas was sent to the Main flare. The loss of the G-803 A/B compressors led to the shutdown of Unit 246. During the event, unscrubbed gas was sent to the Main flare and MP-30 flare. Due to potentially high pressure in the fuel gas system, the G-503 Flare Gas Recovery Compressor was shutdown. This resulted in the flaring of scrubbed and uncscrubbed gases.	PG&E Voltage Sag.	Communicate with PG&E regarding equipment upgrades that may be possible by them to reduce time and severity of voltage sags.	COMPLETED 4/26/16	Duration: 42 hours Flow: 29,470 MSCF Emissions SO2 – 20,474 CH4 – 3,259 NMHC- 4,949	• Upset/Malfunction – Equipment failure which results in an immediate or controlled unit shutdown (4.2.1.4) • Upset/Malfunction – Loss of a utility (power) (4.2.1.4) • Emergency (4.2.1.5) – Local H2S alarms near D-7 drum	358-15 N
			G-201 starter motor failed.	Perform checks on starter motor.	COMPLETED 3/12/16			
			G-803 A/B motor tripped.	Verify the G-803 A/B motor trip settings.	COMPLETED 4/26/16			
			Sour water from D-7 automatically flushes to an open process sewer that can cause an H2S alarm.	Initiation of a project to re-route the Unit 233 pressure control valve flare system tie-in location. Install a tie-in location directly to the flare line downstream of 19F-3. (Connected with additional past Flare RCA's).	COMPLETED 12/2016 Relocated continuous purge on D-7			
1/9-11-16	Unit 240 and 246 Planned Shutdown	On January 9, 2016 Unit 240 and Unit 246 were being shut down for maintenance work. As part of the unit shutdown, and to prepare for maintenance and entry, both units were depressured and purged. The purged material was vented directly to the Main Flare for Unit 240 and the MP-30 Flare for Unit 246 and resulted in the flaring of unscrubbed gases.	No new prevention measures or corrective actions were identified. These activities were planned maintenance activities that will re-occur in the future.	N/A	N/A	Duration: 27 hours Flow: 3,107 MSCF Emissions (lb) SO2 – 51 CH4 – 132 NMHC- 91	• Maintenance, Turnaround, Startup, and Shutdown – Equipment Preparation for Maintenance, Depressuring and Purging	118-16 N
1/17-18/16	Unit 250 Unscheduled Shutdown – Feed Filters	On January 17, 2016 at approximately 00:20 AM, the feed filters at the Unit 250 Diesel Hydrotreater (U250) began to indicate a rapid increase in the pressure drop across the filters. The increase in pressure indicated that the filters were plugging and feed was pulled from U250. Due to the shutdown of U250, the refinery hydrogen header pressure increased and excess hydrogen was sent to the flare gas recovery system. Because the G-503 flare gas recovery compressor cannot compress large amounts of hydrogen and excess hydrogen in the fuel gas system can cause fuel gas issues which can affect safe operation of refinery heaters, the flare gas recovery system was taken off-line. As a result, unscrubbed gas was sent to the Main	Feed Quality at U250.	Develop procedure to require the U250 feed line from U200 to be flushed/cleared after certain U200 upsets.	COMPLETED 8/31/16	Duration: 43 hours Flow: 13,188 MSCF Emissions (lb) SO2 –21,494 CH4 – 2,340 NMHC- 2,819	• Upset/Malfunction – Feed quality issue which results in Unit shutdown (4.2.1.4) • Upset/Malfunction – Hydrogen sent to flare system.	082-16 N

ESDR No. – Internal document tracking number.
Recurrent Failure – Flaring caused by the recurrent failure of air pollution control equipment, process equipment, or a process to operating in a normal or usual manner. Recurrent is two times or more in a 5 year period. (BAAQMD 12-12-401.4.3)

Attachment H

Date	Process or Equipment Item	Flaring Event Description	Root Cause Finding	Action Item(s)	Proposed Dates/Status	Duration, Flow & Emissions	Consistency with Flare Minimization Plan (12-12-406.3)	ESDR No. Recurrent Failure?
		Flare beginning at approximately 01:25 AM.						
1/22 – 23/16, 2/1 – 2/2/16	Planned startup and shutdown of the F-45 Flare System Blowdown Drum	Flaring of uncrubbed gas not recovered by the flare gas recovery system (FGRS) occurred as a result of the planned startup and shutdown of the F-45 Flare System Blowdown Drum (F-45). During the period of time while F-45 was in the process of shutting down and starting up, the FGRS is required to be shutdown. In order to isolate and shutdown F-45, the entire flare system must be lined up to the MP-30 flare instead of the Main Flare. During the process of switching over, and when all gases are being routed to the MP-30 flare, the FGRS compressors must be taken off line. No recovery of gases sent to the flare system is possible during this time and unscrubbed gas was flared. After F-45 was isolated and shutdown, the flare system was re-routed back to the Main Flare (instead of the MP-30 Flare) and the FGRS was put back on-line and the flaring ceased. The shutdown activities and associated flaring described above occurred on January 22nd and 23rd, 2016. After the maintenance and required inspections on F-45 were completed, the entire flare system was again lined up to the MP-30 flare to allow for the safe startup of F-45 and return it to service. While the flare system was lined up to the MP-30 Flare, no flare gas recovery is possible and unscrubbed gas was flared. After F-45 was returned to service, the flare system was re-routed back to the Main Flare and the FGRS was put back on-line and the flaring ceased. These startup related activities occurred on February 1st and 2nd, 2016.	Maintenance on portions of the flare system must occur periodically to ensure reliable operation, and therefore, no prevention measures or corrective actions to prevent recurrence other than the measures taken as described in this report and contained in the Phillips 66 Flare Minimization Plan.	N/A	N/A	Duration: 51 hours Flow: 6,651 MSCF Emissions (lb) SO2 – 9,817 CH4 – 2,205 NMHC- 1,783	• Maintenance, Turnaround, Startup, Shutdown – Equipment Preparation for Maintenance & Working on Equipment (Section 4.2.1.1)	097-16 N
2/10-12/16	Unit 246 Startup	During activities related to startup of Unit 246, one of the reactor depressuring valves was leaking as Unit 246 was being put back into service. This valve is designed to be vented directly to the MP-30 flare. By venting directly to the flare, the potential need to shut down the Flare Gas Recovery Compressor(s) is prevented	Depressure valve at Unit 246 leaking during startup.	Stop leak from depressure valve to allow startup of Unit 246.	COMPLETE 2/12/16	Duration: 34 hours Flow: 2,302 mSCF Emissions (lb) SO2 – 37 CH4 – 645 NMHC- 99	• Upset/Malfunction – Leaking relief valve (4.2.1.4)	161-16 N

ESDR No. – Internal document tracking number.
Recurrent Failure – Flaring caused by the recurrent failure of air pollution control equipment, process equipment, or a process to operating in a normal or usual manner. Recurrent is two times or more in a 5 year period. (BAAQMD 12-12-401.4.3)

Attachment H

Date	Process or Equipment Item	Flaring Event Description	Root Cause Finding	Action Item(s)	Proposed Dates/Status	Duration, Flow & Emissions	Consistency with Flare Minimization Plan (12-12-406.3)	ESDR No. Recurrent Failure?
		and overall flare emissions are minimized. Because of the leaking depressure valve, unscrubbed gases were sent to the flare. However, no H2S was detected in the lab analysis of the flare gas.						
2/12/16	G-501 Wet Gas Compressor Shutdown	At approximately 5:12 AM on February 12, 2016 the G-501 Wet Gas Compressor (G-501) had an unscheduled shut down. The gas from the Unit 200 Bubble Tower which is normally recovered by G-501 was subsequently relieved to the refinery flare gas recovery system (FGRS). Due to the excess gas normally recovered by G-501, the FGRS could not recover the additional process gas resulting in flaring of unscrubbed gas. After review and evaluation of the G-501 compressor shutdown, the compressor was restarted at approximately 9:05 AM and flaring subsided shortly thereafter.	G-520 lube oil pump bearing failure	1. Relocate the location for vibration readings on the G-520 and G-520A lube oil pumps to optimize the vibration measurements on the bearings. 2. Replace G-520 pump bearing and rotors.	1. COMPLETED 2/2016 2. COMPLETED 2/2016	Duration: 4 hours Flow: 2,294 MSCF Emissions (lb) SO2 – 9,420 CH4 – 803 NMHC- 1,084	• Upset/Malfunction – Loss of major compressor, G-501 Wet gas Compressor (4.2.1.4)	113-16 N
			G-G20A failed to auto-start	Test and calibrate pressure switch for Auto-start.	COMPLETED 2/2016			
2/14-15/16	Unit 246 Catalyst Pre-sulfiding	Beginning on February 14, 2016, maintenance activity at the Unit 246 Hydrocracker resulted in higher than typical sulfur concentrations in the refinery fuel gas (RFG). Due to the higher than typical sulfur concentrations in the RFG, refinery personnel reduced RFG consumption at the gas turbines at the Steam Power Plant (SPP) to meet SPP permit conditions which limit SO2 emissions. The reduction in consumption of RFG at the SPP resulted in excess RFG being sent to the flare. This resulted in the flaring of scrubbed gas with higher than typical sulfur concentrations. In addition, at approximately 2:11 pm on February 14, 2016, the SPP C turbine experienced an unscheduled shutdown. This resulted in additional excess RFG that was sent to the flare and increased the amount of scrubbed gas that was flared.	No new prevention measures or corrective actions were identified. These activities were planned maintenance activities that will re-occur in the future.	N/A	N/A	Duration: 32 hours Flow: 7,601 MSCF Emissions (lb) SO2 – 665 CH4 – 1,930 NMHC- 4,124	• Maintenance, Turnaround, Startup, and Shutdown – Fuel Balance	123-16 N
2/22-23/16	Unit 240 Scheduled Start Up	On February 22 and 23, 2016 Unit 240 was in the process of startup after being shut down for planned maintenance work. As part of the startup, recycle gases and other gases were vented to the Flare Gas Recovery System. This	No new prevention measures or corrective actions were identified. These activities were planned maintenance activities that will re-occur in the future.	N/A	N/A	Duration: 17.5 hours Flow: 3,188 MSCF Emissions (lb) SO2 – 53	• Maintenance, Turnaround, Startup, and Shutdown – Unit Startup (4.2.1.1)	162-16 N

ESDR No. – Internal document tracking number.
Recurrent Failure – Flaring caused by the recurrent failure of air pollution control equipment, process equipment, or a process to operating in a normal or usual manner. Recurrent is two times or more in a 5 year period. (BAAQMD 12-12-401.4.3)

Attachment H

Date	Process or Equipment Item	Flaring Event Description	Root Cause Finding	Action Item(s)	Proposed Dates/Status	Duration, Flow & Emissions	Consistency with Flare Minimization Plan (12-12-406.3)	ESDR No. Recurrent Failure?
		contributed to the flaring of excess refinery fuel gas.				CH4 – 758 NMHC- 1,711		
2/25/16	U240 D-302 Depropanizer overhead sent to the flare gas recovery system during startup	On February 25, 2016, flaring occurred intermittently from approximately 1:00 PM until 4:00 PM due to process upsets which occurred during the startup of the Unicracker Complex (Units 240, 244, 246 and 248). During the startup of Unit 240 (U240), feed swings led to overhead material (primarily light hydrocarbons – butane and propane) from the U240 D-302 Depropanizer being sent to the flare gas recovery system (FGRS). The additional gas in the FGRS caused the fuel gas system to increase pressure and relieve treated refinery fuel (RFG) to the flare, resulting in the flaring of scrubbed gas. In addition, as the pressure in the fuel gas system continued to increase due to the overhead material from U240 D-302, the FGRS was taken off-line and circulated. This resulted in the flaring of unscrubbed gases.	Failure of D-302 LIC003 Level Indicator	Maintenance completed on LIC003. Instrument reading accurately.	COMPLETED 2/25/2016	Duration: 2 hours Flow: 380 MSCF Emissions (lb) SO2 – 1,123 CH4 – 91 NMHC- 262	• Upset/Malfunction – Failure of instrumentation to function as designed (4.2.1.4) • Maintenance, Turnaround, Startup, and Shutdown – Fuel Balance • Emergency (4.2.1.5) – Local H2S alarms near D-7 drum	144-16 N
			Sour water from D-7 automatically flushes to an open process sewer that can cause an H2S alarm.	Initiation of a project to re-route the Unit 233 pressure control valve flare system tie-in location. Install a tie-in location directly to the flare line downstream of 19F-3. (Connected with additional past Flare RCA's).	COMLPETED 12/2016 Relocated continuous purge on D-7			
3/12-13/16	Unscheduled shutdown of the G-202 Hydrogen Recycle Compressor	On March 12, 2016, the Unit 240 Plant 2 Hydrocracker (U240) had an unscheduled shut down due to the shutdown of the G-202 Hydrogen Recycle Compressor (G-202). As part of the U240 shutdown procedure, gases are vented directly to the Main flare, bypassing the flare gas recovery system. During this period, unscrubbed gas is sent to the flare.	G-202 Seal oil Level Controller LCV-208 Not Operating Correctly	Valve positioner on LCV-208 replaced. Instrument reading accurately.	COMPLETED 3/12/2016	Duration: 22.5 hours Flow: 1509 MSCF Emissions (lb) SO2 – 622 CH4 – 153 NMHC- 496	• Upset/Malfunction – Failure of instrumentation to function as designed (4.2.1.4)	159-16 N
3/14-15/16	Unscheduled Shutdown of Unit 246 - G-802 recycle gas compressor	On March 14, 2016, there was intermittent flaring at the Main and MP-30 flares related to the unscheduled shutdown of the Unit 246 Heavy Gas Oil Hydrocracker (Unit 246). This led to the flaring of both scrubbed and unscrubbed gas.	Isolation valve 246XV045 on U246 G-802 failed closed.	Replaced the solenoid that failed which caused the isolation valve to close.	COMPLETED 3/14/16	Duration: 27 hours Flow: 4806 MSCF Emissions (lb) SO2 –327 CH4 – 1004 NMHC- 1703	• Upset/Malfunction – Loss of other compressors (recycle hydrogen) (4.2.1.4)	181-16 N

ESDR No. – Internal document tracking number.
Recurrent Failure – Flaring caused by the recurrent failure of air pollution control equipment, process equipment, or a process to operating in a normal or usual manner. Recurrent is two times or more in a 5 year period. (BAAQMD 12-12-401.4.3)

Attachment H

Date	Process or Equipment Item	Flaring Event Description	Root Cause Finding	Action Item(s)	Proposed Dates/Status	Duration, Flow & Emissions	Consistency with Flare Minimization Plan (12-12-406.3)	ESDR No. Recurrent Failure?
6/28/16	Unscheduled shutdown of the flare gas recovery compressors, G-503 and G-540 A, B and C	The primary cause of the flaring was the unscheduled shutdown of the flare gas recovery compressors, G-503 and G-540 A, B and C (G-540 ABC). When these compressors are shutdown, gases normally recovered and sent to the refinery fuel gas (RFG) system are sent to the flare. The G-503 recovery compressor shutdown due to high liquid level in the interstage knockout pot of the compressor. The G-540 ABC recovery compressors shutdown due to high suction temperature.	No alternate cooling during Coker steam out if G-52 is not operating.	Complete tie-ins for alternate cooling facilities during Coker steam out.	COMPLETED 10/25/16	Duration: 4 hours Flow: 574 MSCF Emissions (lb) SO2 – 715 CH4 – 195 NMHC- 289	• Upset/Malfunction – Loss of flare gas recovery compressors; high inlet temperature and high liquid level (4.2.1.4) • Upset/Malfunction – Loss of a utility; cooling water (4.2.1.4)	258-16 N
1/9-13/16	Unit 250 Scheduled Shutdown	On January 9 through 12, 2017, process vessels at the Unit 250 Diesel Hydrotreater (Unit 250) were purged and cooled with nitrogen as part of the planned shutdown and maintenance of Unit 250. During this period, nitrogen was used to purge gases from the unit and cool equipment. These gases were directed to the flare and bypassed the flare gas recovery system.	No new prevention measures or corrective actions were identified. The maintenance at Unit 250 is a planned activity that will re-occur in the future.	N/A	N/A	Duration: 70.25 hours Flow: 4,452 MSCF Emissions (lb) SO2 – 85 CH4 – 47 NMHC - 144	• Maintenance, Turnaround, Startup, and Shutdown – Unit Startup (4.2.1.1)	070-17 N
1/22/17	Unscheduled Shutdown of Unit 246 - G-814 Charge Pump	On 1/22/2017 at approximately 3:23 PM, the G-814 hydrocracker charge pump (G-814) at Unit 246 failed which caused an unscheduled shutdown of the unit. The emergency isolation valve (246XY032) on the suction of G-814 closed due to a suspected solenoid failure which caused an automatic shutdown of G-814 on low flow. Due to the shutdown of G-814, the Unit 246 reactors depressured gas directly to the flare resulting in the flaring of unscrubbed gas. In addition, during the shutdown of Unit 246, gases were also vented to the flare gas recovery system (FGRS) which led to an excess amount of refinery fuel gas (RFG). Due to the excess amount of RFG, scrubbed gas was also flared.	Solenoid failure on Isolation valve 246XY032 on U246 G-814 failed closed.	Change operation of solenoid so that it is energized to close the isolation valve. If solenoid fails, valve will remain open.	COMPLETED 2/22/17	Duration: 2.2 hours Flow: 1,309 MSCF Emissions (lb) SO2 – 486 CH4 – 62 NMHC - 155	• Upset/Malfunction – Loss of other compressors (recycle hydrogen) (4.2.1.4)	089-17 N
7/8/17	Unscheduled Shutdown of G-401 A/B Compressors	On July 8, 2017, at approximately 2:20 PM, a grass fire started along Interstate 80E and proceeded into Phillips 66 property, near the refinery's seasonal storage tanks. The fire quickly moved to an adjacent field, where PG&E high power lines pass that feed into the Refinery electrical system. Power was	Power loss led to equipment shutdown.	Investigate options, such as time delay, to prevent shutdown of the G-401 A/B compressors during brief power dips.	This item was evaluated and determined not to be implemented as it would not have been beneficial in preventing this flaring event.	Duration:6.5 hours Flow: 545 MSCF Emissions (lb) SO2 – 9 CH4 – 210 NMHC - 268	• Reduced Consumption of Fuel Gas – Fuel Gas Imbalance (Section 4.2.1.3)	295-17 N

ESDR No. – Internal document tracking number.
Recurrent Failure – Flaring caused by the recurrent failure of air pollution control equipment, process equipment, or a process to operating in a normal or usual manner. Recurrent is two times or more in a 5 year period. (BAAQMD 12-12-401.4.3)

Attachment H

Date	Process or Equipment Item	Flaring Event Description	Root Cause Finding	Action Item(s)	Proposed Dates/Status	Duration, Flow & Emissions	Consistency with Flare Minimization Plan (12-12-406.3)	ESDR No. Recurrent Failure?
		lost from one of four feeder line's supplying the Refinery which led to shutdown of several pieces of equipment, including the G-401 A/B compressors. These compressors are used to provide feed gas (A-Gas) to the third-party Air Liquide Hydrogen Plant, which is a large consumer of fuel gas. During the shutdown of the compressors, the A-Gas normally sent to Air Liquide had to be consumed at the refinery. Due to the imbalance in the fuel gas system, the additional A-Gas that could not be consumed by the refinery process heaters was flared. During this period, only excess scrubbed fuel gas was flared.						
7/10/17	Unit 240 Plant 2 Scheduled Shutdown	On July 10, 2017, process vessels at Unit 240 Plant 2 (Unit 240-2) were purged and cooled with nitrogen as part of the planned shutdown and maintenance of the Unit. During this period, nitrogen was used to purge gases from the unit and cool equipment. These gases were directed to the flare and bypassed the flare gas recovery system. The primary cause of the flaring was the scheduled shutdown of Unit 240-2. During purging and cooling, nitrogen is sent directly to the Main Flare. During this time, the only gases flared are those gases remaining in the process unit and the nitrogen used to purge the unit.	No new prevention measures or corrective actions were identified. The maintenance at Unit 240-2 is a planned activity that will re-occur in the future.	N/A	N/A	Duration: 12.1 hours Flow: 1,286.5 MSCF Emissions (lb) SO2 – 12 CH4 – 287 NMHC – 89	• Maintenance, Turnaround, Startup, Shutdown – Equipment Preparation for Maintenance (Section 4.2.1.1)	283-17 N
11/11/18	G-501 Wet Gas Compressor Unplanned Shutdown	At approximately 6:38 AM on November 11, 2018 the G-501 Wet Gas Compressor (G-501) had an unscheduled shutdown. The unplanned shutdown occurred during the Unit 200 startup following a turnaround. Following the G-501 shutdown, the gas from the Unit 200 Bubble Tower, which is normally recovered by G-501, was subsequently relieved to the refinery flare gas recovery system (FGRS). Due to the excess gas normally recovered by G-501, the FGRS could not recover the additional process gas resulting in flaring of unscrubbed gas. Following troubleshooting of the G-501 compressor shutdown and subsequent	1. G-501 Replacement Motor Protective Relay Installed was not configured for existing analog signal -	Replacement motor protective relay was re-configured to transmit the necessary analog signal so that AMP levels could be transmitted to the Distributed Control System (DCS) for monitoring and alarms.	COMPLETED 11/11/18	Duration: 8.2 hours Flow: 1,182 MSCF Emissions (lb) SO2 – 4,179 CH4 – 445 NMHC – 591	• Upset/Malfunction – Loss of major compressor, G-501 Wet gas Compressor (4.2.1.4)	371-18 N
			G-501 Compressor Shutdown Limit Enhancement	A suction pressure operating guideline will be incorporated into the Unit 200 start-up procedure to note the 15 psi limit (approximate).	COMPLETED 4/16/19			

ESDR No. – Internal document tracking number.
Recurrent Failure – Flaring caused by the recurrent failure of air pollution control equipment, process equipment, or a process to operating in a normal or usual manner. Recurrent is two times or more in a 5 year period. (BAAQMD 12-12-401.4.3)

Attachment H

Date	Process or Equipment Item	Flaring Event Description	Root Cause Finding	Action Item(s)	Proposed Dates/Status	Duration, Flow & Emissions	Consistency with Flare Minimization Plan (12-12-406.3)	ESDR No. Recurrent Failure?
		control repairs, the compressor was restarted at approximately 1:50 PM and flaring subsided shortly thereafter. The primary cause of the flaring was the unscheduled shutdown of G-501, which caused excess gas to be sent to the FGRS. The amount of gas being sent to the FGRS exceeded the recovery capacity of the system and the excess was flared. Upon investigation, it was discovered that the G-501 Wet Gas Compressor shutdown due to a motor high amperage (AMPs) safety shutdown activation. Motor AMPs are an indication of load being pulled on a compressor.						
12/7/18	G-503 Flare Gas Recovery Compressor Unplanned Shutdown	At approximately 2:00 AM on December 7, 2018 the G-503 Flare Gas Recovery Compressor (G-503) had an unscheduled shutdown. Flare activity continued until repairs were made and the Compressor was restarted. The flaring ended at approximately 3:24 PM. on the second stage suction knock-out pot. The level indicator is an equipment safety protection device. Following the shutdown, the knock-out pot was examined and no liquid was found in the sight glass. Maintenance personnel were called out to examine potential compressor instrument failures. Initially a lube oil pressure switch was replaced. Replacement of the lube oil pressure switch alone did not allow the G-503 compressor to be restarted. A faulty coil in the motor circuitry was later determined to be the cause of the false high liquid level indication and the faulty coil was replaced. The replacement of the faulty coil allowed the G-503 compressor to be restarted.	G-503 shutdown due to faulty high liquid level indication in the second station suction knock-out pot.	1.Lube oil pressure switch replacement.	COMPLETED 12/7/18	Duration: 13.6 hours Flow: 2,451 MSCF Emissions (lb) SO2 – 2,075 CH4 – 623 NMHC – 990	• Upset/Malfunction – Loss of flare gas compressor (p. 4-29) • Upset/Malfunction – Failure of instrumentation to function as designed (p. 4-19)	030-19 N
				2. Replacement of faulty coil in the motor circuitry.	COMPLETED 12/7/18			
3/25/19	Fuel Gas Upset – Flaring Fuel Gas to SPP	A fuel gas upset occurred on March 25, 2019 that resulted in hydrogen sulfide (H_2S) in the refinery fuel gas (RFG) to be at estimated concentrations greater	1. Lack of anti-foam in DGA system.	1. Replaced pump with spare.	COMPLETED 3/26/19	Duration: 22.86 hours Flow: 1,726 MSCF	• 4.2.1.4 Upset/Malfunction – Fuel Gas Quality Upsets	151-19 N

ESDR No. – Internal document tracking number.
Recurrent Failure – Flaring caused by the recurrent failure of air pollution control equipment, process equipment, or a process to operating in a normal or usual manner. Recurrent is two times or more in a 5 year period. (BAAQMD 12-12-401.4.3)

Attachment H

Date	Process or Equipment Item	Flaring Event Description	Root Cause Finding	Action Item(s)	Proposed Dates/Status	Duration, Flow & Emissions	Consistency with Flare Minimization Plan (12-12-406.3)	ESDR No. Recurrent Failure?
		than the 162 ppm (3-hour average) regulatory limit. Due to the higher-than-typical sulfur concentrations in the RFG, refinery personnel reduced RFG consumption at the Steam Power Plant (SPP) gas turbines to meet SPP federally enforceable permit conditions that limit SO_2 mass emissions. The reduction in consumption of RFG at the SPP resulted in excess RFG being sent to the flare. This resulted in the flaring of partially scrubbed gas with higher-than-typical sulfur concentrations.				Emissions (lb) SO2 – 317 CH4 – 500 NMHC – 1,377		
			1. Foaming in DGA resulting in loss of H_2S stripping efficiency.	1. Add additional alarms to provide early indication when foaming may be occurring.	COMPLETED 6/21/19			
4/23/19	3rd Party Hydrogen Plant shutdown due to faulty component on PSA valve	On April 23, 2019 at approximately 5:50 PM the Air Liquide Hydrogen Plant located next to the refinery experienced a sudden unplanned shutdown. Off-gas produced at the Phillips 66 Rodeo Refinery which is referred to as RFG A is a process feed to the Air Liquide Hydrogen Plant Hydrogen Reformer. Due to the sudden, unplanned shutdown the RFG A was not being utilized as feed by the Air Liquide Plant. This resulted in flaring of scrubbed RFG A gas. In addition, due to the sudden loss of a large volume of Hydrogen which supports the refinery process units this resulted in upset conditions for a number of units as well as fuel gas imbalances due to the sudden change in demand for refinery fuel gas.	1. Unplanned shutdown due to faulty component on PSA valve.	1. Faulty valve component identified and replaced prior to 3rd party hydrogen plant restart.	COMPLETED 4/24/19	Duration: 7.63 hours Flow: 1,048 MSCF Emissions (lb) SO2 – 18 CH4 – 267 NMHC – 676	• Fuel and Hydrogen Gas Balance (4.2.1.1) – Unplanned Hydrogen supplier shutdowns	152-19 N

ESDR No. – Internal document tracking number.
Recurrent Failure – Flaring caused by the recurrent failure of air pollution control equipment, process equipment, or a process to operating in a normal or usual manner. Recurrent is two times or more in a 5 year period. (BAAQMD 12-12-401.4.3)

ATTACHMENT I

STORAGE, TREATMENT, & RECOVERY SCHEMATIC

Flare Gas Recovery With Storage Sphere

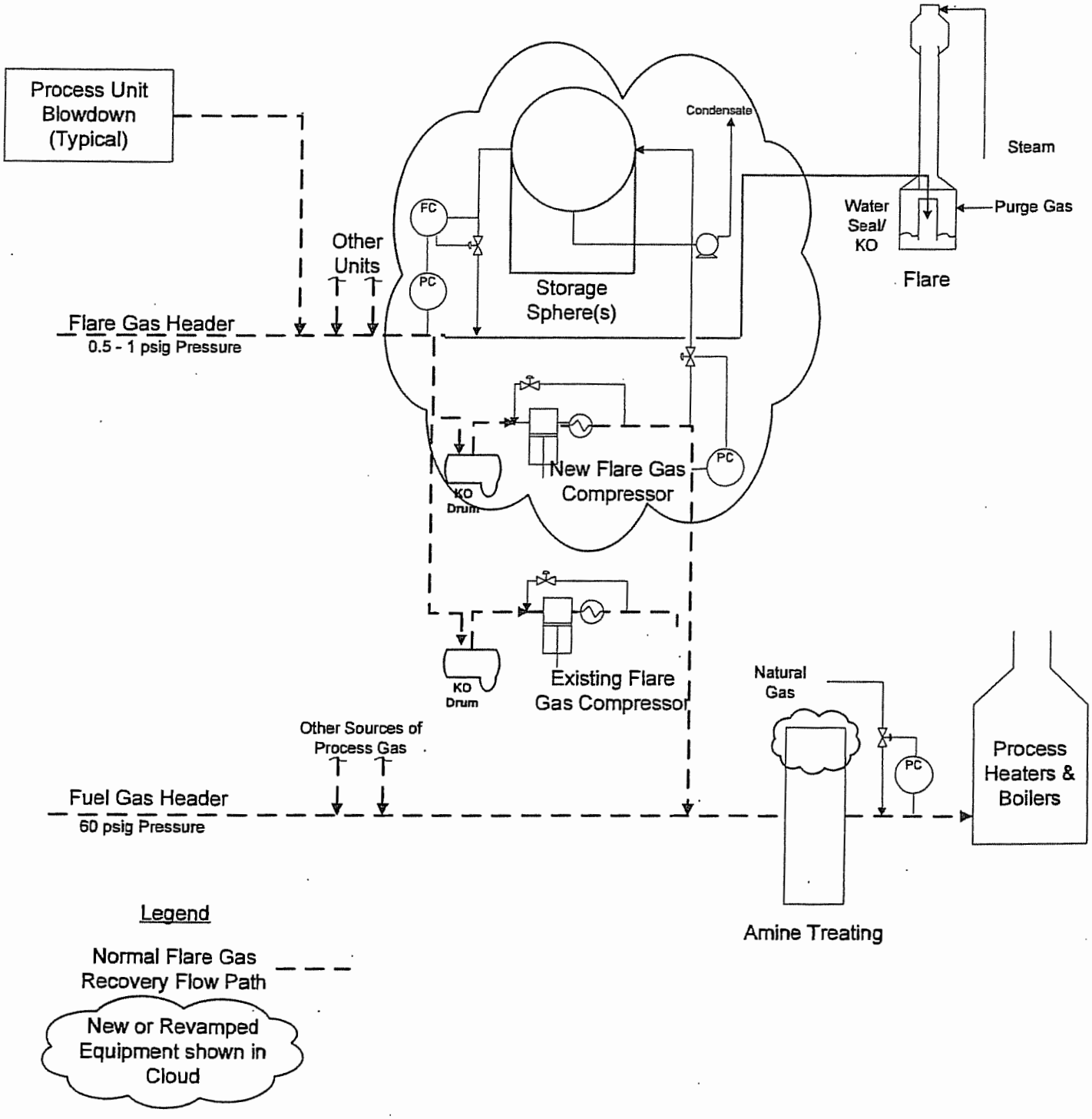

ATTACHMENT J

Pressure Relief Valves that can Vent to the Flare

Attachment J

Unit	Tag	Location	Service	Size (inches)	Subtype
COKER - #200 COKER	21912-000	G/4 NSD P G-61 PRV PSV-120	LIGHT LIQUID	3	CVS NO RD
COKER - #200 COKER	32203-000	G/15 100FT SE FLR 19C-1	GAS / VAPOR	3	CVS NO RD
COKER - #200 COKER	32304-000	G/3 65FT SE CNR J ST. & ROAD 6 PRV PSV-84	LIGHT LIQUID	1	CVS NO RD
COKER - #200 COKER	21885-000	G/5 30FT N V F-502 ESD PRV PSV-104	GAS / VAPOR	3	CVS NO RD
COKER - #200 COKER	21964-000	T/4 NSD T D-505 PRV	GAS / VAPOR	6	CVS NO RD
COKER - #200 COKER	22044-000	1/10 TOP V F-501 PRV	GAS / VAPOR	0.5	CVS NO RD
COKER - #200 COKER	22366-000	1/7 WSD V D-561 PRV PSV-1869	GAS / VAPOR	1.5	CVS NO RD
COKER - #200 COKER	22429-000	1/4 CTR V F-540 PRV PSV-1865	GAS / VAPOR	1	CVS NO RD
COKER - #200 COKER	22549-000	G/6 22FT N V F-502 PRV PSV-116	GAS / VAPOR	1	CVS NO RD
COKER - #200 COKER	22787-000	T/4 WSD V D-504 PRV E	GAS / VAPOR	2	CVS NO RD
COKER - #200 COKER	22788-000	T/4 WSD V D-504 PRV W	GAS / VAPOR	2	CVS NO RD
COKER - #200 COKER	22935-000	G/5 25FT NW E E-503B PRV PSV-106	LIGHT LIQUID	2	CVS NO RD
COKER - #200 COKER	22954-000	G/4 20FT W H B-501 PRV PSV-122	GAS / VAPOR	4	CVS NO RD
COKER - #200 COKER	50214-000	G/7 10FT NW C G-503 PRV PSV-120	GAS / VAPOR	6	CVS NO RD
COKER - #200 COKER	50215-000	G/7 8FT W C G-503 PRV PSV-131	GAS / VAPOR	6	CVS NO RD
COKER - #200 COKER	80018-000	T/4 WSD V D-503 PRV PSV 102	GAS / VAPOR	2	CVS NO RD
COKER - #200 COKER	21906-000	2/8 ABV E E-52 PRV	GAS / VAPOR	6	CVS NO RD
COKER - #200 COKER	21908-000	2/5 WSD E E-52 PRV PSV-130	GAS / VAPOR	6	CVS NO RD
COKER - #200 COKER	24064-000	1/7 10FT N E-237C CV FV-1560	GAS / VAPOR	3	CVS NO RD
COKER - #200 COKER	24070-000	1/4 ESD E-240C CV FV-708	LIGHT LIQUID	2	CVS NO RD
COKER - #200 COKER	24073-000	1/3 SWSD E E-239 PRV PSV-978	LIGHT LIQUID	1.5	CVS NO RD
COKER - #200 COKER	24142-000	T/2 MID V F-4 PRV PSV-12	GAS / VAPOR	4	CVS NO RD
COKER - #200 COKER	24161-000	T/6 NSD V F-204 PRV PSV-16	GAS / VAPOR	3	CVS NO RD
COKER - #200 COKER	24162-000	T/6 NSD V F-204 PRV PSV-17	GAS / VAPOR	3	CVS NO RD
COKER - #200 COKER	24233-000	G/12 18FT W E E-239 PRV	GAS / VAPOR	2	CVS NO RD
COKER - #200 COKER	24393-000	G/2 11FT NW H B-201 PRV PC-604	GAS / VAPOR	1	CVS NO RD
COKER - #200 COKER	24499-000	G/10 SSD E E-113 PRV	LIGHT LIQUID	0.75	CVS NO RD
COKER - #200 COKER	24502-000	1/4 WSD FF E-219 PRV	GAS / VAPOR	1	CVS NO RD
COKER - #200 COKER	24649-000	T/6 SWSD V D-101 PRV PSV-767	GAS / VAPOR	6	CVS NO RD
COKER - #200 COKER	24650-000	T/6 MID V D-101 PRV PSV-14	GAS / VAPOR	6	CVS NO RD
COKER - #200 COKER	24720-000	1/8 ESD V F-101 PRV	GAS / VAPOR	6	CVS NO RD
COKER - #200 COKER	24923-000	3/7 10FT NE E E-201 PRV PSV-745	GAS / VAPOR	2	CVS NO RD
COKER - #200 COKER	25040-000	T/5 ESD T D-205 PRV PSV-742	GAS / VAPOR	6	CVS NO RD
COKER - #200 COKER	31591-000	1/5 ESD E E-239 PRV PSV-994	LIGHT LIQUID	2	CVS NO RD
COKER - #200 COKER	32131-000	1/5 SSD T D-101 PRV PSV-982	GAS / VAPOR	3	CVS NO RD
COKER - #200 COKER	36368-000	G/5 5FT E H B-201 PRV PSV-61	GAS / VAPOR	1	CVS NO RD
COKER - #200 COKER	83064-000	1/4 NSD E E-237C ESD PRV PSV-995	GAS / VAPOR	4	CVS NO RD
COKER - #200 COKER	83742-000	3/5 ESD E E-201 PRV PSV-707	LIGHT LIQUID	0.75	CVS NO RD
COKER - #200 COKER	23893-000	G/15 NSD V F-104 PRV PSV-979	GAS / VAPOR	2	CVS NO RD
COKER - #200 COKER	23963-000	G/18 SESD V F-14 PRV	GAS / VAPOR	2	CVS NO RD
COKER - #200 COKER	18729-000	1/9 SWSD E E-212B PRV PSV	LIGHT LIQUID	3	CVS NO RD

Attachment J

Unit	Tag	Location	Service	Size (inches)	Subtype
COKER - #200 COKER	18735-000	1/8 SESD E E-211 PRV PSV	LIGHT LIQUID	3	CVS NO RD
COKER - #200 COKER	18868-000	1/4 8FT SE E E-511 PRV PSV-997	GAS / VAPOR	3	CVS NO RD
COKER - #200 COKER	23047-000	G/3 SSD P GM-54 PRV	LIGHT LIQUID	1	CVS NO RD
COKER - #200 COKER	23069-000	T/2 TOP T D-103 SSD E E-111B	GAS / VAPOR	6	CVS NO RD
COKER - #200 COKER	23108-000	1/2 NWSD E E-100 PRV PSV-79	LIGHT LIQUID	1	CVS NO RD
COKER - #200 COKER	23402-000	1/3 WSD E E-212B	GAS / VAPOR	1	CVS NO RD
COKER - #200 COKER	23409-000	1/7 4FT SW E E-211	GAS / VAPOR	4	CVS NO RD
COKER - #200 COKER	23767-000	1/5 ESD FF E-62C PRV PSV-469	GAS / VAPOR	1.5	CVS NO RD
COKER - #200 COKER	23768-000	1/5 8FT NE FF E-62C PRV PSV-4040	GAS / VAPOR	1.5	CVS NO RD
COKER - #200 COKER	23769-000	1/5 8FT NE FF E-62C PRV PSV-401C	GAS / VAPOR	0.75	CVS NO RD
COKER - #200 COKER	23771-000	1/5 9FT NE FF E-62C PRV PSV-405C	GAS / VAPOR	0.75	CVS NO RD
COKER - #200 COKER	23776-000	1/5 8FT NE FF E-62B PRV PSV-404B	GAS / VAPOR	1.5	CVS NO RD
COKER - #200 COKER	23777-000	1/5 9FT NE FF E-62B PRV PSV-405B	GAS / VAPOR	1	CVS NO RD
COKER - #200 COKER	23779-000	1/5 10FT NE FF E-62B PRV PSV-401B	GAS / VAPOR	1	CVS NO RD
COKER - #200 COKER	23784-000	1/5 8FT NE FF E-62A PRV PSV-404A	GAS / VAPOR	1.5	CVS NO RD
COKER - #200 COKER	23785-000	1/5 9FT NE FF E-62A PRV PSV-405A	GAS / VAPOR	1	CVS NO RD
COKER - #200 COKER	23787-000	1/5 10FT NE FF E-62A PRV PSV-401A	GAS / VAPOR	1	CVS NO RD
COKER - #200 COKER	31587-000	1/7 SWSD E E-108 PRV PSV	GAS / VAPOR	3	CVS NO RD
COKER - #200 COKER	32133-000	1/9 NSD E E-211 PRV	GAS / VAPOR	3	CVS NO RD
COKER - #200 COKER	18726-000	G/22 12FT S E E-213 PRV PSV-922	GAS / VAPOR	3	CVS NO RD
COKER - #200 COKER	21904-000	G/23 ESD V F-103 PRV PSV-72	GAS / VAPOR	4	CVS NO RD
COKER - #200 COKER	21916-000	1/9 15FT SW E E-211 PRV	GAS / VAPOR	6	CVS NO RD
COKER - #200 COKER	23840-000	G/13 ABV E E-207A PRV	GAS / VAPOR	0.75	CVS NO RD
COKER - #200 COKER	23843-000	G/13 ABV E E-207C PRV	LIGHT LIQUID	0.75	CVS NO RD
COKER - #200 COKER	23849-000	G/20 ABV E E-102A PRV PSV-713	GAS / VAPOR	0.75	CVS NO RD
COKER - #200 COKER	23851-000	G/20 ABV E E-102B PRV	GAS / VAPOR	0.75	CVS NO RD
COKER - #200 COKER	23853-000	G/20 ABV E E-103 PRV PSV-754	GAS / VAPOR	0.75	CVS NO RD
COKER - #200 COKER	23858-000	G/22 ABV E E-210 BLD PRV PSV-993	LIGHT LIQUID	3	CVS NO RD
COKER - #200 COKER	23871-000	G/15 10FT SE E E-102C PRV PSV-1168	GAS / VAPOR	0.75	CVS NO RD
COKER - #200 COKER	23872-000	G/18 10FT S E E-210 PRV PSV-925	GAS / VAPOR	0.75	CVS NO RD
COKER - #200 COKER	23874-000	G/15 SSD H B-5 PRV PSV-926	GAS / VAPOR	3	CVS NO RD
COKER - #200 COKER	23887-000	G/13 ESD V F-103 TOP	GAS / VAPOR	6	CVS NO RD
COKER - #200 COKER	10180-000	T/6 SWSD T D-201 PRV PSV	GAS / VAPOR	6	CVS NO RD
COKER - #200 COKER	10182-000	T/6 SESD T D-202 PRV PSV	GAS / VAPOR	6	CVS NO RD
COKER - #200 COKER	10185-000	T/6 SWSD T D-203 PRV PSV	GAS / VAPOR	6	CVS NO RD
COKER - #200 COKER	10188-000	T/6 SESD T D-204 PRV PSV	GAS / VAPOR	6	CVS NO RD
COKER - #200 COKER	18720-000	7/6 6FT W T D-206 PRV PSV-990	GAS / VAPOR	3	CVS NO RD
COKER - #200 COKER	18723-000	7/6 8FT SW T D-206 PRV PSV-991	GAS / VAPOR	3	CVS NO RD
COKER - #200 COKER	18750-000	T/8 MID T D-206 PRV PSV	GAS / VAPOR	6	CVS NO RD
COKER - #200 COKER	26209-000	2/4 35FT SE H B-202 PRV PSV-854	GAS / VAPOR	6	CVS NO RD
COKER - #200 COKER	26214-000	2/4 20FT SE H B-202 PRV PSV-856	GAS / VAPOR	6	CVS NO RD

Attachment J

Unit	Tag	Location	Service	Size (inches)	Subtype
COKER - #200 COKER	26219-000	2/5 25FT SE H B-202 PRV PSV-859	GAS / VAPOR	1	CVS NO RD
COKER - #200 COKER	26317-000	G/1 15FT S P G-215 PRV	LIGHT LIQUID	0.25	CVS NO RD
COKER - #200 COKER	26453-000	T/5 NSD T D-206 PRV PSV-900 S	GAS / VAPOR	8	CVS NO RD
COKER - #200 COKER	26455-000	T/5 NSD T D-206 PRV PSV-901	GAS / VAPOR	6	CVS NO RD
COKER - #200 COKER	26456-000	T/5 NSD T D-206 PRV PSV-902 N	GAS / VAPOR	8	CVS NO RD
COKER - #200 COKER	26476-000	2/4 45FT NE T D-204 PRV	GAS / VAPOR	3	CVS NO RD
COKER - #200 COKER	26726-000	T/6 SWSD T D-201 PRV PSV-867	GAS / VAPOR	6	CVS NO RD
COKER - #200 COKER	26750-000	T/6 SESD T D-202 PRV PSV-873	GAS / VAPOR	8	CVS NO RD
COKER - #200 COKER	26755-000	T/6 SWSD T D-203 PRV PSV-757	GAS / VAPOR	6	CVS NO RD
COKER - #200 COKER	26776-000	T/6 SESD T D-204 PRV PSV-881	GAS / VAPOR	6	CVS NO RD
COKER - #200 COKER	36373-000	T/8 NESD V F-224 PRV	GAS / VAPOR	2	CVS NO RD
COKER - #215 GAS FRACT.	3277-000	2/4 6FT W E E-702B PRV PSV-792	GAS / VAPOR	6	CVS NO RD
COKER - #215 GAS FRACT.	3485-000	T/5 ESD V F-101 PRV 215 PSV-20 PRV	GAS / VAPOR	1.5	CVS NO RD
COKER - #215 GAS FRACT.	3581-000	T/6 TOP V D-101 PRV 215 PSV-6 PRV	GAS / VAPOR	3	CVS NO RD
COKER - #215 GAS FRACT.	3818-000	1/0 TOP TK F-111 PRV 1-D-A	GAS / VAPOR	2	CVS NO RD
COKER - #215 GAS FRACT.	3823-000	1/0 TOP TK F-111 PRV	GAS / VAPOR	20	CVS NO RD
COKER - #215 GAS FRACT.	4081-000	2/3 5FT NE V F-122 PRV PSV-847 PRV	GAS / VAPOR	1.5	CVS NO RD
COKER - #215 GAS FRACT.	4084-000	2/3 5FT N V F-122 PRV PSV-846 PRV	GAS / VAPOR	1.5	CVS NO RD
COKER - #215 GAS FRACT.	4085-000	2/3 5FT NW V F-122 PRV PSV-845 PRV	GAS / VAPOR	1.5	CVS NO RD
COKER - #215 GAS FRACT.	52230-000	G/5 NSD P G-103A PRV PSV-30	LIGHT LIQUID	2	CVS NO RD
COKER - #215 GAS FRACT.	52232-000	G/4 NSD P G-103 PRV PSV-29	LIGHT LIQUID	2	CVS NO RD
COKER - #215 GAS FRACT.	52503-000	2/2 SSD V F-4 PRV PSV-18	GAS / VAPOR	4	CVS NO RD
COKER - #215 GAS FRACT.	52504-000	T/5 ABV V D-4 PRV 215 PSV-1 PRV	GAS / VAPOR	6	CVS NO RD
COKER - #215 GAS FRACT.	52506-000	G/8 20FT SE V F-1 PRV PSV-45	LIGHT LIQUID	1	CVS NO RD
COKER - #215 GAS FRACT.	4163-000	G/22 8FT NW V F-126 PRV	LIGHT LIQUID	2	CVS NO RD
COKER - #215 GAS FRACT.	4165-000	G/22 12FT NW V F-126 PRV	LIGHT LIQUID	2	CVS NO RD
COKER - #215 GAS FRACT.	3265-000	3/6 8FT NE E E-702A PRV PSV-862 PRV	GAS / VAPOR	3	CVS NO RD
COKER - #215 GAS FRACT.	3267-000	3/5 8FT N E E-702A PRV PSV-749 PRV	GAS / VAPOR	6	CVS NO RD
COKER - #215 GAS FRACT.	3270-000	2/4 7FT NE E E-702A PRV PSV-717 PRV	GAS / VAPOR	1.5	CVS NO RD
COKER - #215 GAS FRACT.	3271-000	2/4 8FT NW E E-702A PRV PSV-712 PRV	GAS / VAPOR	1.5	CVS NO RD
COKER - #215 GAS FRACT.	80913-000	2/4 8FT NW E E-702A PRV PSV-732 PRV	GAS / VAPOR	1.5	CVS NO RD
COKER - #215 GAS FRACT.	80914-000	4/4 ABV V F-702A PRV PSV-731 PRV	GAS / VAPOR	1.5	CVS NO RD
COKER - #233 FUEL GAS CENTER	31963-000	G/11 5FT E V F-601 PRV PSV-11	GAS / VAPOR	6	CVS NO RD
COKER - #233 FUEL GAS CENTER	6555-000	1/3 ABV V F-603 PRV PSV-9 PRV	GAS / VAPOR	6	CVS NO RD
COKER - #233 FUEL GAS CENTER	6715-000	G/10 ABV E E-601 PRV PV-601 PRV	GAS / VAPOR	4	CVS NO RD
COKER - #233 FUEL GAS CENTER	6754-000	1/6 ESD V F-605 PRV PSV-10 PRV	GAS / VAPOR	3	CVS NO RD
COKER - #233 FUEL GAS CENTER	7323-000	G/15 TOP V F-604 PRV PSV-5 PRV	GAS / VAPOR	2	CVS NO RD
COKER - #233 FUEL GAS CENTER	7347-000	1/10 ABV V F-601 PRV PV-1 PRV	GAS / VAPOR	6	CVS NO RD
COKER - #233 FUEL GAS CENTER	7378-000	1/9 ABV V F-602 PRV PV-2 PRV	GAS / VAPOR	6	CVS NO RD
COKER - #267 CRUDE	33837-000	1/5 5FT S T D-601 PRV PSV-1751	GAS / VAPOR	1.5	CVS NO RD
COKER - #267 CRUDE	34284-000	2/5 7FT SE E E-603A PRV PSV-1685	GAS / VAPOR	2	CVS NO RD

Attachment J

Unit	Tag	Location	Service	Size (inches)	Subtype
COKER - #267 CRUDE	34286-000	2/5 8FT SE E E-603 A PRV PSV-1634	GAS / VAPOR	3	CVS NO RD
COKER - #267 CRUDE	34289-000	2/5 9FT SE E E-603 A PRV PSV-1626	GAS / VAPOR	4	CVS NO RD
COKER - #267 CRUDE	34307-000	2/6 ESD E E-602B PRV PSV-1507	LIGHT LIQUID	0.75	CVS NO RD
COKER - #267 CRUDE	34319-000	2/6 ESD E E-602A PRV PSV-1506	LIGHT LIQUID	0.75	CVS NO RD
COKER - #267 CRUDE	34353-000	3/12 SSD E E-625 PRV	GAS / VAPOR	4	CVS NO RD
COKER - #267 CRUDE	34374-000	3/6 13FT E E E-631 PRV PSV-1619A	GAS / VAPOR	8	CVS NO RD
COKER - #267 CRUDE	34376-000	3/6 12FT E E E-631 PRV PSV-1619B	GAS / VAPOR	8	CVS NO RD
COKER - #267 CRUDE	34386-000	G/4 4FT SE D F-616 PRV PSV-1532	LIGHT LIQUID	0.5	CVS NO RD
COKER - #267 CRUDE	52501-000	G/4 4FT SE D F-616 PRV PSV	LIGHT LIQUID	0.75	CVS NO RD
COKER - #267 CRUDE	53937-000	1/3 NSD FF E-608 PRV PSV-1703	LIGHT LIQUID	3	CVS NO RD
COKER - #267 CRUDE	53938-000	1/5 NSD FF E-608 ESD PRV PSV-1707	LIGHT LIQUID	3	CVS NO RD
COKER - #267 CRUDE	53939-000	1/3 NESD FF E-608 PRV PSV-1712	LIGHT LIQUID	3	CVS NO RD
COKER - #267 CRUDE	81139-000	1/3 NSD FF E-608 PRV PSV-1698	LIGHT LIQUID	3	CVS NO RD
COKER - #267 CRUDE	33369-000	1/4 WSD E E-612 PRV PSV-1514	GAS / VAPOR	3	CVS NO RD
COKER - #267 CRUDE	33372-000	1/5 WSD E E-612 PRV PSV-1518	GAS / VAPOR	3	CVS NO RD
COKER - #267 CRUDE	52539-000	1/5 WSD E E-612 PRV PSV-1803	GAS / VAPOR	3	CVS NO RD
COKER - #267 CRUDE	52553-000	1/5 WSD E E-612 PRV PSV-1802	GAS / VAPOR	3	CVS NO RD
COKER - #267 CRUDE	80557-000	G/2 4FT NW E E-614A SWSD CHEM TOTE	LIGHT LIQUID	0.5	CVS NO RD
COKER - #267 CRUDE	33435-000	G/25 15FT NW P G-601A PRV PSV-1521	GAS / VAPOR	4	CVS NO RD
COKER - #267 CRUDE	33436-000	G/25 16FT NW P G-601A PRV PSV	GAS / VAPOR	4	CVS NO RD
EAST BULK - #100 WASTE WATER	10543-000	G/5 NWSD TK TK-501 PRV	LIGHT LIQUID	1	CVS NO RD
EAST BULK - #100 WASTE WATER	10654-000	G/7 4FT S C E-235B PRV PSV-71	GAS / VAPOR	1	CVS NO RD
EAST BULK - #100 WASTE WATER	10677-000	G/8 NESD V F-207B	GAS / VAPOR	1	CVS NO RD
EAST BULK - #100 WASTE WATER	10703-000	G/7 4FT S C E-235A PRV PSV-1378	GAS / VAPOR	1	CVS NO RD
EAST BULK - #100 WASTE WATER	10728-000	G/8 NESD V F-207A PRV	GAS / VAPOR	1	CVS NO RD
EAST BULK - #100 WASTE WATER	10786-000	1/4 TOP V F-206 PRV PSV-900	GAS / VAPOR	3	CVS NO RD
EAST BULK - #100 WASTE WATER	10849-000	1/2 WSD V F-216 PRV PSV-922	GAS / VAPOR	6	CVS NO RD
EAST BULK - #100 WASTE WATER	10857-000	G/4 ESD P GM-219A PRV PSV-930	LIGHT LIQUID	1	CVS NO RD
EAST BULK - #100 WASTE WATER	10864-000	G/4 WSD P GM-219B PRV PSV-931	LIGHT LIQUID	1	CVS NO RD
EAST BULK - #100 WASTE WATER	10915-000	1/2 TOP V F-218 PRV PSV-1145	GAS / VAPOR	4	CVS NO RD
EAST BULK - #100 WASTE WATER	10938-000	1/4 19FT W P G-210 PRV PSV-848	GAS / VAPOR	10	CVS NO RD
EAST BULK - #100 WASTE WATER	11023-000	1/4 8FT N P G-234C PRV PSV-847	GAS / VAPOR	8	CVS NO RD
EAST BULK - #100 WASTE WATER	11139-000	G/3 111FT W P G-231 PRV PSV-237	LIGHT LIQUID	1	CVS NO RD
EAST BULK - #100 WASTE WATER	11166-000	G/2 12FT SW P G-231	LIGHT LIQUID	0.75	CVS NO RD
EAST BULK - #100 WASTE WATER	11167-000	G/2 12FT SW P G-231	LIGHT LIQUID	1	CVS NO RD
EAST BULK - #100 WASTE WATER	11178-000	G/1 5FT SW P G-231	LIGHT LIQUID	1	CVS NO RD
EAST BULK - #100 WASTE WATER	11186-000	G/3 WSD P G-231	LIGHT LIQUID	0.75	CVS NO RD
EAST BULK - #100 WASTE WATER	11208-000	G/3 7FT E TK TK-193 N	LIGHT LIQUID	1	CVS NO RD
EAST BULK - #100 WASTE WATER	11209-000	G/3 7FT E TK TK-193 MID	LIGHT LIQUID	1	CVS NO RD
EAST BULK - #100 WASTE WATER	11212-000	G/3 7FT E TK TK-193 S	LIGHT LIQUID	1	CVS NO RD
EAST BULK - #100 WASTE WATER	11295-000	G/5 NESD TK TK-130 PRV PSV-1439	LIGHT LIQUID	0.75	CVS NO RD

Attachment J

Unit	Tag	Location	Service	Size (inches)	Subtype
EAST BULK - #100 WASTE WATER	11569-000	G/3 6FT W TK TK-194 PRV PSV-183	LIGHT LIQUID	0.75	CVS NO RD
EAST BULK - #100 WASTE WATER	11570-000	G/3 6FT W TK TK-194 PRV PSV-151	LIGHT LIQUID	0.75	CVS NO RD
EAST BULK - #100 WASTE WATER	11571-000	G/3 6FT W TK TK-194 PRV PSV-150	LIGHT LIQUID	0.75	CVS NO RD
EAST BULK - #100 WASTE WATER	2874-000	G/5 SWSD TK TK-502 PRV PSV-1441	LIGHT LIQUID	1	CVS NO RD
EAST BULK - #100 WASTE WATER	11426-000	G/5 WSD TK TK-235 PRV PCV-235	GAS / VAPOR	1.5	CVS NO RD
EAST BULK - #100 WASTE WATER	11432-000	G/8 5FT NW TK TK-235 PRV PSV-132	GAS / VAPOR	2	CVS NO RD
EAST BULK - #100 WASTE WATER	11458-000	G/8 NESD TK TK-236 PRV PSV-133	LIGHT LIQUID	2	CVS NO RD
EAST BULK - #100 WASTE WATER	11461-000	G/5 ESD TK TK-236 PRV PCV-236	LIGHT LIQUID	1.5	CVS NO RD
EAST BULK - #100 WASTE WATER	10255-000	G/6 NESD P G-10 PRV-PSV-4 PRV	LIGHT LIQUID	1	CVS NO RD
EAST BULK - #100 WASTE WATER	10268-000	G/4 NSD P G-8 PRV PSV-5	LIGHT LIQUID	1	CVS NO RD
EAST BULK - #100 WASTE WATER	10270-000	G/4 SSD P G-7 PRV PSV-6	LIGHT LIQUID	1	CVS NO RD
EAST BULK - #100 WASTE WATER	10285-000	G/6 SSD P G-9 PRV PSV-4	LIGHT LIQUID	1	CVS NO RD
EAST BULK - #100 WASTE WATER	10322-000	G/3 SSD P G-167 PRV PSV-U-355	LIGHT LIQUID	3	CVS NO RD
EAST BULK - #100 WASTE WATER	10332-000	G/4 SSD P G-267 PRV PSV-955	LIGHT LIQUID	3	CVS NO RD
EAST BULK - #40 RAW MAT.	29029-000	G/3 20FT NE CNR M ST & ROAD 5 PRV PSV-1548	LIGHT LIQUID	0.75	CVS NO RD
EAST BULK - #40 RAW MAT.	29032-000	G/3 20FT NE CNR M ST & ROAD 5 PRV PSV-894	LIGHT LIQUID	0.75	CVS NO RD
EAST BULK - #40 RAW MAT.	29055-000	G/2 38FT SW V F-809 PRV PSV-7	LIGHT LIQUID	1	CVS NO RD
EAST BULK - #40 RAW MAT.	29059-000	G/2 36FT SW V F-809 PRV PSV-5	LIGHT LIQUID	0.75	CVS NO RD
EAST BULK - #40 RAW MAT.	29107-000	G/4 48FT W V F-809 PRV PSV-62	GAS / VAPOR	0.75	CVS NO RD
EAST BULK - #40 RAW MAT.	29112-000	G/4 48FT E V F-809 PRV PSV-383	GAS / VAPOR	0.75	CVS NO RD
EAST BULK - #40 RAW MAT.	29116-000	G/4 48FT E V F-809 PRV PSV-379	LIGHT LIQUID	0.75	CVS NO RD
EAST BULK - #40 RAW MAT.	29119-000	G/4 48FT E V F-809 PRV PSV-358	LIGHT LIQUID	0.75	CVS NO RD
EAST BULK - #40 RAW MAT.	29122-000	G/4 48FT E V F-809 PRV PSV-359	LIGHT LIQUID	0.75	CVS NO RD
EAST BULK - #40 RAW MAT.	29124-000	G/4 48FT E V F-809 PRV PSV-180	GAS / VAPOR	0.75	CVS NO RD
EAST BULK - #40 RAW MAT.	29127-000	G/4 48FT E V F-809 PRV PSV-387	LIGHT LIQUID	0.75	CVS NO RD
EAST BULK - #40 RAW MAT.	29185-000	G/8 4FT N CNR O ST & ROAD 7 PRV PSV-388	LIGHT LIQUID	0.75	CVS NO RD
EAST BULK - #40 RAW MAT.	29187-000	G/2 NSD CNR O ST & ROAD 7 PRV PSV-591	LIGHT LIQUID	0.75	CVS NO RD
EAST BULK - #40 RAW MAT.	29229-000	G/5 60FT NE CNR N ST & ROAD 7 PRV PSV-44	LIGHT LIQUID	0.75	CVS NO RD
EAST BULK - #40 RAW MAT.	29275-000	G/6 25FT S CNR M ST. & ROAD 7 PRV PSV-30	LIGHT LIQUID	0.75	CVS NO RD
EAST BULK - #40 RAW MAT.	29294-000	G/3 40FT S CNR M ST. & ROAD 7 PRV PSV-702	LIGHT LIQUID	0.75	CVS NO RD
EAST BULK - #40 RAW MAT.	29300-000	G/3 42FT S CNR M ST. & ROAD 7 PRV PSV-436	LIGHT LIQUID	1	CVS NO RD
EAST BULK - #40 RAW MAT.	29329-000	G/4 15FT NE CNR I ST & ROAD 7 PRV PSV-121	LIGHT LIQUID	0.75	CVS NO RD
EAST BULK - #40 RAW MAT.	29330-000	G/4 16FT NE CNR I ST. & ROAD 7 PRV PSV-547	LIGHT LIQUID	0.75	CVS NO RD
EAST BULK - #40 RAW MAT.	29347-000	1/2 6FT NE P CP-827 PRV	LIGHT LIQUID	0.75	CVS NO RD
EAST BULK - #40 RAW MAT.	29411-000	G/3 50FT SW CNR M ST & ROAD 7 PRV PSV-384	LIGHT LIQUID	0.75	CVS NO RD
EAST BULK - #40 RAW MAT.	29418-000	G/2 35FT SW CNR M ST. & ROAD 7 PRV PSV-365	LIGHT LIQUID	0.75	CVS NO RD
EAST BULK - #40 RAW MAT.	29420-000	G/3 45FT SW CNR M ST. & ROAD 7 PRV PSV-363	LIGHT LIQUID	0.75	CVS NO RD
EAST BULK - #40 RAW MAT.	29430-000	G/4 50FT SW CNR M ST. & ROAD 7 PRV PSV-364	LIGHT LIQUID	0.75	CVS NO RD
EAST BULK - #40 RAW MAT.	29439-000	G/5 55FT S CNR M ST & ROAD 7 PRV PSV-411	LIGHT LIQUID	1	CVS NO RD
EAST BULK - #40 RAW MAT.	29442-000	G/5 54FT S CNR M ST & ROAD 7 PRV PSV-410	LIGHT LIQUID	1	CVS NO RD
EAST BULK - #40 RAW MAT.	29482-000	G/2 28FT SW CNR M ST & ROAD 6 PRV PSV-461	LIGHT LIQUID	0.75	CVS NO RD

Attachment J

Unit	Tag	Location	Service	Size (inches)	Subtype
EAST BULK - #40 RAW MAT.	29488-000	G/2 25FT SW CNR M ST & ROAD 6 PRV PSV-460	LIGHT LIQUID	1	CVS NO RD
EAST BULK - #40 RAW MAT.	29546-000	G/2 20FT SW P CP-1253 PRV PSV-51	LIGHT LIQUID	0.75	CVS NO RD
EAST BULK - #40 RAW MAT.	29575-000	G/3 30FT W CNR J ST & ROAD 7 PRV PSV-812	LIGHT LIQUID	0.75	CVS NO RD
EAST BULK - #40 RAW MAT.	29577-000	G/4 40FT W CNR J ST & ROAD 7 PRV PSV-37	LIGHT LIQUID	0.75	CVS NO RD
EAST BULK - #40 RAW MAT.	29586-000	G/2 38FT W CNR J ST. & ROAD 7 PRV PSV-176	LIGHT LIQUID	0.75	CVS NO RD
EAST BULK - #40 RAW MAT.	29589-000	G/2 38FT W CNR J ST. & ROAD 7 PRV PSV-402	LIGHT LIQUID	0.75	CVS NO RD
EAST BULK - #40 RAW MAT.	29591-000	G/2 38FT W CNR J ST. & ROAD 7 PRV PSV-398	LIGHT LIQUID	0.75	CVS NO RD
EAST BULK - #40 RAW MAT.	29592-000	G/2 38FT W CNR J ST. & ROAD 7 PRV PSV-200	LIGHT LIQUID	0.75	CVS NO RD
EAST BULK - #40 RAW MAT.	29595-000	G/4 39FT W CNR J ST & ROAD 7 PRV PSV-1546	LIGHT LIQUID	0.75	CVS NO RD
EAST BULK - #40 RAW MAT.	29621-000	1/6 18FT SE P CP-931 PRV PSV-594	LIGHT LIQUID	0.75	CVS NO RD
EAST BULK - #40 RAW MAT.	29635-000	G/5 10FT S P CP-931 PRV PSV-212	LIGHT LIQUID	0.75	CVS NO RD
EAST BULK - #40 RAW MAT.	29658-000	1/7 15FT S P CP-931 PRV	LIGHT LIQUID	0.75	CVS NO RD
EAST BULK - #40 RAW MAT.	29663-000	G/7 13FT SE P CP-389 PRV PSV-40	LIGHT LIQUID	0.75	CVS NO RD
EAST BULK - #40 RAW MAT.	29666-000	G/5 10FT SE P G-106 PRV PSV-228	LIGHT LIQUID	0.75	CVS NO RD
EAST BULK - #40 RAW MAT.	29680-000	1/7 16FT SW P CP-389 PRV	LIGHT LIQUID	0.75	CVS NO RD
EAST BULK - #40 RAW MAT.	29682-000	G/2 18FT SW P CP-389 PRV PSV-235	LIGHT LIQUID	0.75	CVS NO RD
EAST BULK - #40 RAW MAT.	29684-000	G/2 14FT SW P CP-389 PRV PSV-301	LIGHT LIQUID	0.75	CVS NO RD
EAST BULK - #40 RAW MAT.	29687-000	G/7 12FT SW P G-106 PRV PSV-197	LIGHT LIQUID	0.75	CVS NO RD
EAST BULK - #40 RAW MAT.	29688-000	G/2 12FT SW P G-106 PRV PSV-244	LIGHT LIQUID	0.75	CVS NO RD
EAST BULK - #40 RAW MAT.	29704-000	G/2 15FT SW P G-106 PRV PSV-292	LIGHT LIQUID	0.75	CVS NO RD
EAST BULK - #40 RAW MAT.	29708-000	1/7 15FT SW P CP-389 PRV	LIGHT LIQUID	0.75	CVS NO RD
EAST BULK - #40 RAW MAT.	29717-000	1/7 22FT SW P CP-389 PRV PSV-332	LIGHT LIQUID	0.75	CVS NO RD
EAST BULK - #40 RAW MAT.	29729-000	G/4 31FT SW P CP-389 PRV PSV-185	LIGHT LIQUID	0.75	CVS NO RD
EAST BULK - #40 RAW MAT.	29731-000	G/6 33FT SW P CP-389 PRV PSV-144	LIGHT LIQUID	0.75	CVS NO RD
EAST BULK - #40 RAW MAT.	29733-000	G/3 33FT SW P CP-389 PRV PSV-182	LIGHT LIQUID	0.75	CVS NO RD
EAST BULK - #40 RAW MAT.	29744-000	1/1 28FT SW P CP-794 PRV PSV-171	LIGHT LIQUID	0.75	CVS NO RD
EAST BULK - #40 RAW MAT.	29801-000	G/2 75FT SW BLDG 76 CONTROL ROOM PRV	LIGHT LIQUID	0.75	CVS NO RD
EAST BULK - #40 RAW MAT.	80909-000	G/6 21FT W J ST&RD 7 PSV40-300	LIGHT LIQUID	1	CVS NO RD
EAST BULK - #40 RAW MAT.	21896-000	G/6 SESD TK TK-200 PRV PSV-59	LIGHT LIQUID	1	CVS NO RD
EAST BULK - #40 RAW MAT.	28230-000	G/3 47FT SW TK TK-202	GAS / VAPOR	2	CVS NO RD
EAST BULK - #40 RAW MAT.	28250-000	G/5 8FTW TK TK-257 PRV PSV-132	LIGHT LIQUID	1	CVS NO RD
EAST BULK - #40 RAW MAT.	28292-000	G/3 NWSD TK TK-257 PRV PSV-133	LIGHT LIQUID	0.75	CVS NO RD
EAST BULK - #40 RAW MAT.	28395-000	G/3 5FT W TK TK-204 PRV PSV-647	LIGHT LIQUID	1	CVS NO RD
EAST BULK - #40 RAW MAT.	28490-000	G/5 NESD V F-600 PRV PSV-0075	GAS / VAPOR	2	CVS NO RD
EAST BULK - #40 RAW MAT.	28526-000	G/3 12FT SW TK TK-271 PRV PSV-772	LIGHT LIQUID	1	CVS NO RD
EAST BULK - #40 RAW MAT.	28531-000	G/3 13FT SW TK TK-271 PRV PSV-770	LIGHT LIQUID	1	CVS NO RD
EAST BULK - #40 RAW MAT.	28584-000	G/3 NSD TK TK-271 PRV PSV-800	LIGHT LIQUID	1	CVS NO RD
EAST BULK - #40 RAW MAT.	28590-000	G/4 NSD TK TK-271 PRV PSV-776	LIGHT LIQUID	1	CVS NO RD
EAST BULK - #40 RAW MAT.	28608-000	G/4 35FT SW TK TK-285 PRV PSV-769	LIGHT LIQUID	1	CVS NO RD
EAST BULK - #40 RAW MAT.	28611-000	G/2 35FT SW TK TK-285 PRV PSV-767	LIGHT LIQUID	1	CVS NO RD
EAST BULK - #40 RAW MAT.	28791-000	G/3 5FT SW TK TK-298 PRV PSV-374	LIGHT LIQUID	1	CVS NO RD

Attachment J

Unit	Tag	Location	Service	Size (inches)	Subtype
EAST BULK - #40 RAW MAT.	28793-000	G/3 5FT SW TK TK-298 PRV PSV-375	LIGHT LIQUID	1	CVS NO RD
EAST BULK - #40 RAW MAT.	28806-000	G/4 WSD TK TK-298 PRV PSV-76	LIGHT LIQUID	1	CVS NO RD
EAST BULK - #40 RAW MAT.	28821-000	G/3 5FT SW TK TK-296 PRV PSV-383	LIGHT LIQUID	1	CVS NO RD
EAST BULK - #40 RAW MAT.	28836-000	G/5 WSD TK TK-296 PRV PSV-72	LIGHT LIQUID	1	CVS NO RD
EAST BULK - #40 RAW MAT.	28849-000	G/2 5FT SW TK TK-295 PRV PSV-380	LIGHT LIQUID	1	CVS NO RD
EAST BULK - #40 RAW MAT.	28850-000	G/3 6FT SW TK TK-295 PRV PSV-366	LIGHT LIQUID	1	CVS NO RD
EAST BULK - #40 RAW MAT.	37151-000	G/4 6FT E TK TK-200 PRV PSV-200	LIGHT LIQUID	1	CVS NO RD
EAST BULK - #40 RAW MAT.	51163-000	G/3 3FT N TK TK-223 PRV PSV-745	LIGHT LIQUID	0.75	CVS NO RD
EAST BULK - #40 RAW MAT.	53927-000	G/5 30FT E TK TK-223	GAS / VAPOR	0.75	CVS NO RD
EAST BULK - #40 RAW MAT.	80034-000	G/3 5FT SW TK TK-296 PRV PSV-371	LIGHT LIQUID	1	CVS NO RD
EAST BULK - #40 RAW MAT.	81315-000	G/4 10FT W TK TK-202 PSV-25	LIGHT LIQUID	1	CVS NO RD
EAST BULK - #40 RAW MAT.	81317-000	G/3 10FT W TK TK-202 PSV-26	LIGHT LIQUID	1	CVS NO RD
EAST BULK - #40 RAW MAT.	81319-000	G/3 10FT W TK TK-202 PSV-703	LIGHT LIQUID	1	CVS NO RD
EAST BULK - #40 RAW MAT.	81331-000	G/3 SWSD TK TK-202 PSV-4	LIGHT LIQUID	1	CVS NO RD
EAST BULK - #40 RAW MAT.	82728-000	G/3 NESD TK TK-285 PRV PSV-801	LIGHT LIQUID	1	CVS NO RD
EAST BULK - #40 RAW MAT.	27177-000	G/4 9FT SE P G-6 PRV PSV-73	LIGHT LIQUID	0.75	CVS NO RD
EAST BULK - #40 RAW MAT.	27354-000	/8 25FT SW BLDG 40 CNTRL ROOM ABV CV FV-11	LIGHT LIQUID	1	CVS NO RD
EAST BULK - #40 RAW MAT.	27470-000	G/5 46FT NW BLDG 40 CNTRL ROOM PRV PSV-18	LIGHT LIQUID	1	CVS NO RD
EAST BULK - #40 RAW MAT.	27478-000	G/7 50FT NW BLDG 40 CNTRL ROOM PRV PSV-2	LIGHT LIQUID	8	CVS NO RD
EAST BULK - #40 RAW MAT.	27483-000	G/6 56FT NW BLDG 40 CNTRL ROOM PRV PSV-1	LIGHT LIQUID	8	CVS NO RD
EAST BULK - #40 RAW MAT.	27611-000	G/6 18FT SE P G-3 PRV PSV-63	LIGHT LIQUID	1	CVS NO RD
EAST BULK - #40 RAW MAT.	27641-000	G/4 4FT E P G-3 PRV PSV-31	LIGHT LIQUID	0.75	CVS NO RD
EAST BULK - #40 RAW MAT.	27686-000	G/6 4FT N P G-3A PRV PSV-30	LIGHT LIQUID	0.75	CVS NO RD
EAST BULK - #40 RAW MAT.	27722-000	G/4 7FT E P G-4 PRV PSV-18	LIGHT LIQUID	0.75	CVS NO RD
EAST BULK - #40 RAW MAT.	27795-000	G/8 7FT N P G-7 PRV	LIGHT LIQUID	0.75	CVS NO RD
EAST BULK - #40 RAW MAT.	27817-000	G/4 16FT NE P G-7 PRV PSV-55	LIGHT LIQUID	0.75	CVS NO RD
EAST BULK - #40 RAW MAT.	27887-000	G/5 6FT E P G-6A PRV PSV-57	LIGHT LIQUID	0.75	CVS NO RD
EAST BULK - #40 RAW MAT.	51024-000	G/10 93FT NW BLDG 40 CNTRL ROOM PRV	LIGHT LIQUID	10	CVS NO RD
EAST BULK - #40 RAW MAT.	51110-000	G/9 93FT NW BLDG 40 CNTRL ROOM PRV	LIGHT LIQUID	10	CVS NO RD
EAST BULK - #40 RAW MAT.	27191-000	G/4 4FT W TK TK-150 PRV PSV-20	LIGHT LIQUID	0.75	CVS NO RD
EAST BULK - #40 RAW MAT.	27199-000	G/4 6FT W TK TK-150 PRV PSV-21	LIGHT LIQUID	0.75	CVS NO RD
EAST BULK - #40 RAW MAT.	27959-000	G/4 8FT W TK TK-159 PRV PSV-11	LIGHT LIQUID	1	CVS NO RD
EAST BULK - #40 RAW MAT.	27966-000	G/4 8FT W TK TK-159 PRV PSV-12	LIGHT LIQUID	2	CVS NO RD
EAST BULK - #40 RAW MAT.	27971-000	G/3 WSD TK TK-159 PRV PSV-13	LIGHT LIQUID	1	CVS NO RD
EAST BULK - #40 RAW MAT.	27992-000	G/4 SESD TK TK-157 PRV PSV-6	LIGHT LIQUID	0.75	CVS NO RD
EAST BULK - #40 RAW MAT.	27994-000	G/3 SESD TK TK-157 PRV PSV-5	LIGHT LIQUID	0.75	CVS NO RD
EAST BULK - #40 RAW MAT.	28003-000	G/4 8FT S TK TK-157 PRV PSV-4	LIGHT LIQUID	0.75	CVS NO RD
EAST BULK - #40 RAW MAT.	28010-000	G/4 7FT S TK TK-157 PRV PSV-3	LIGHT LIQUID	0.75	CVS NO RD
EAST BULK - #40 RAW MAT.	28018-000	G/5 SESD TK TK-158 PRV PSV-9	LIGHT LIQUID	0.75	CVS NO RD
EAST BULK - #40 RAW MAT.	28031-000	G/4 8FT S TK TK-158 PRV PSV-8	LIGHT LIQUID	0.75	CVS NO RD
EAST BULK - #40 RAW MAT.	28038-000	G/4 7FT S TK TK-158 PRV PSV-7	LIGHT LIQUID	0.75	CVS NO RD

Attachment J

Unit	Tag	Location	Service	Size (inches)	Subtype
EAST BULK - #40 RAW MAT.	28043-000	G/6 100FT E TK TK-156 TOP PIG LAUNCHER	LIGHT LIQUID	0.75	CVS NO RD
EAST BULK - #40 RAW MAT.	28063-000	G/4 6FT E TK TK-108 PRV PSV-705	LIGHT LIQUID	0.75	CVS NO RD
EAST BULK - #40 RAW MAT.	28068-000	G/3 6FT E TK TK-108 PRV PSV-706	LIGHT LIQUID	0.75	CVS NO RD
EAST BULK - #40 RAW MAT.	28078-000	G/4 SESD TK TK-108 PRV PSV-707	LIGHT LIQUID	0.75	CVS NO RD
EAST BULK - #40 RAW MAT.	28084-000	G/4 6FT E TK TK-107 PRV PSV-689	LIGHT LIQUID	0.75	CVS NO RD
EAST BULK - #40 RAW MAT.	28088-000	G/5 6FT E TK TK-107 PRV PSV-688	LIGHT LIQUID	0.75	CVS NO RD
EAST BULK - #40 RAW MAT.	28101-000	G/5 NESD TK TK-107 PRV PSV-696	LIGHT LIQUID	0.75	CVS NO RD
EAST BULK - #40 RAW MAT.	28114-000	G/3 SESD TK TK-156 PRV PSV-766	LIGHT LIQUID	0.75	CVS NO RD
EAST BULK - #40 RAW MAT.	28126-000	G/4 6FT E TK TK-156 PRV PSV-43	LIGHT LIQUID	0.75	CVS NO RD
EAST BULK - #40 RAW MAT.	28130-000	G/4 6FT E TK TK-156 PRV PSV-45	LIGHT LIQUID	0.75	CVS NO RD
EAST BULK - #40 RAW MAT.	28139-000	G/3 NESD TK TK-180 PRV PSV-551	LIGHT LIQUID	0.75	CVS NO RD
EAST BULK - #40 RAW MAT.	28140-000	G/4 NESD TK TK-180 PRV	LIGHT LIQUID	0.75	CVS NO RD
EAST BULK - #40 RAW MAT.	28154-000	G/4 8FT N TK TK-180 PRV PSV-55A	LIGHT LIQUID	0.75	CVS NO RD
EAST BULK - #40 RAW MAT.	28156-000	G/4 8FT N TK TK-180 PRV PSV-556	LIGHT LIQUID	0.75	CVS NO RD
EAST BULK - #40 RAW MAT.	28168-000	G/3 NESD TK TK-155 PRV PSV-238	LIGHT LIQUID	0.75	CVS NO RD
EAST BULK - #40 RAW MAT.	28180-000	G/4 7FT N TK TK-155 PRV PSV-42	LIGHT LIQUID	0.75	CVS NO RD
EAST BULK - #40 RAW MAT.	28183-000	G/4 15FT N TK TK-155 PRV PSV-38	LIGHT LIQUID	0.75	CVS NO RD
EAST BULK - #40 RAW MAT.	28200-000	G/3 NWSD TK TK-150 PRV PSV-71	LIGHT LIQUID	0.75	CVS NO RD
EAST BULK - #40 RAW MAT.	29795-000	G/4 SWSD TK TK-154 PRV	LIGHT LIQUID	0.75	CVS NO RD
EAST BULK - #40 RAW MAT.	28479-000	T/4 SWSD TK TK-269 PRV PSV-269	GAS / VAPOR	0.75	CVS NO RD
EAST BULK - #76 GAS BLDNG.	13797-000	T/5 NESD TK F-300 PRV PSV-759	GAS / VAPOR	6	CVS NO RD
EAST BULK - #76 GAS BLDNG.	13801-000	T/5 ESD TK F-300 PRV PSV-760	GAS / VAPOR	6	CVS NO RD
EAST BULK - #76 GAS BLDNG.	13859-000	T/4 NESD TK F-301 PRV PSV-352	GAS / VAPOR	3	CVS NO RD
EAST BULK - #76 GAS BLDNG.	13911-000	G/5 5FT SW P G-325 PRV PSV-135	LIGHT LIQUID	0.75	CVS NO RD
EAST BULK - #76 GAS BLDNG.	13914-000	G/4 7FT SW P G-325 PRV PSV-134	LIGHT LIQUID	0.75	CVS NO RD
EAST BULK - #76 GAS BLDNG.	13954-000	G/3 7FT NW P G-321 PRV PSV-32	LIGHT LIQUID	0.75	CVS NO RD
EAST BULK - #76 GAS BLDNG.	13968-000	G/5 NSD P G-321 PRV PSV-13	LIGHT LIQUID	0.75	CVS NO RD
EAST BULK - #76 GAS BLDNG.	2932-000	G/4 8FT SW P G-309 PRV PSV-181	LIGHT LIQUID	0.75	CVS NO RD
EAST BULK - #76 GAS BLDNG.	11652-000	G/3 4FT SE P PD-121 PRV PSV-112	LIGHT LIQUID	1	CVS NO RD
EAST BULK - #76 GAS BLDNG.	11663-000	G/3 ESD P PD-121 PRV PSV-3	LIGHT LIQUID	1	CVS NO RD
EAST BULK - #76 GAS BLDNG.	11683-000	G/3 3FT SE P PD-119 PRV PSV-118	LIGHT LIQUID	1	CVS NO RD
EAST BULK - #76 GAS BLDNG.	11701-000	G/4 5FT E P PD-119 PRV PSV-118	LIGHT LIQUID	1	CVS NO RD
EAST BULK - #76 GAS BLDNG.	11720-000	G/3 6FT NE V F-10 PRV PSV-111	LIGHT LIQUID	1	CVS NO RD
EAST BULK - #76 GAS BLDNG.	11753-000	G/3 NSD V F-181 PRV PSV-120	LIGHT LIQUID	1	CVS NO RD
EAST BULK - #76 GAS BLDNG.	11760-000	G/3 SSD V F-182 PRV PSV-121	LIGHT LIQUID	1	CVS NO RD
EAST BULK - #76 GAS BLDNG.	11813-000	G/3 SSD V F-183 PRV PSV-122	LIGHT LIQUID	1	CVS NO RD
EAST BULK - #76 GAS BLDNG.	11818-000	G/3 NSD V F-184 PRV PSV-123	LIGHT LIQUID	1	CVS NO RD
EAST BULK - #76 GAS BLDNG.	11841-000	T/4 T V F-183	GAS / VAPOR	2	CVS NO RD
EAST BULK - #76 GAS BLDNG.	11873-000	1/5 NESD V F-184 PRV PSV-118	GAS / VAPOR	1.5	CVS NO RD
EAST BULK - #76 GAS BLDNG.	11922-000	G/4 11FT NE P G-500 PRV PSV-12 PRV	LIGHT LIQUID	1	CVS NO RD
EAST BULK - #76 GAS BLDNG.	11937-000	G/2 30FT E P G-500 PRV PSV-133 PRV	LIGHT LIQUID	1	CVS NO RD

Attachment J

Unit	Tag	Location	Service	Size (inches)	Subtype
EAST BULK - #76 GAS BLDNG.	11979-000	G/6 4FT E P G-506 PRV PSV-17 PRV	LIGHT LIQUID	1	CVS NO RD
EAST BULK - #76 GAS BLDNG.	12009-000	G/5 ESD P G-504 PRV PSV-33 PRV	LIGHT LIQUID	1	CVS NO RD
EAST BULK - #76 GAS BLDNG.	12023-000	G/5 ESD P G-500 PRV PSV-79 PRV	LIGHT LIQUID	0.75	CVS NO RD
EAST BULK - #76 GAS BLDNG.	12028-000	G/5 WSD P G-500 PRV PSV-91 PRV	LIGHT LIQUID	0.75	CVS NO RD
EAST BULK - #76 GAS BLDNG.	12051-000	G/3 NWSD P PD-74 PRV PSV-103 PRV	LIGHT LIQUID	1	CVS NO RD
EAST BULK - #76 GAS BLDNG.	12058-000	G/3 WSD P PD-74 PRV PSV-102 PRV	LIGHT LIQUID	1	CVS NO RD
EAST BULK - #76 GAS BLDNG.	12065-000	G/3 7FT W P PD-74 PRV PSV-76 PRV	LIGHT LIQUID	1	CVS NO RD
EAST BULK - #76 GAS BLDNG.	12074-000	G/6 12FT W P G-501 PRV PSV-85 PRV	LIGHT LIQUID	1	CVS NO RD
EAST BULK - #76 GAS BLDNG.	12089-000	G/5 ESD P G-501 PRV PSV-80 PRV	LIGHT LIQUID	1	CVS NO RD
EAST BULK - #76 GAS BLDNG.	12102-000	G/4 10FT SE P G-501 PRV PSV-7 PRV	LIGHT LIQUID	1	CVS NO RD
EAST BULK - #76 GAS BLDNG.	12113-000	G/5 ESD P G-503 PRV PSV-82 PRV	LIGHT LIQUID	1	CVS NO RD
EAST BULK - #76 GAS BLDNG.	12146-000	G/5 ESD P G-502 PRV PSV-81 PRV	LIGHT LIQUID	1	CVS NO RD
EAST BULK - #76 GAS BLDNG.	12181-000	G/7 ESD P CP-507 PRV PSV-799	LIGHT LIQUID	1	CVS NO RD
EAST BULK - #76 GAS BLDNG.	12182-000	G/5 NSD P CP-507 PRV PSV-88	LIGHT LIQUID	1	CVS NO RD
EAST BULK - #76 GAS BLDNG.	12214-000	G/5 15FT NE P CP-745 PRV PSV-186	LIGHT LIQUID	1	CVS NO RD
EAST BULK - #76 GAS BLDNG.	12236-000	G/5 ESD P CP-745 PRV PSV-102	LIGHT LIQUID	1	CVS NO RD
EAST BULK - #76 GAS BLDNG.	12259-000	G/5 ESD P CP-746 PRV PSV-104	LIGHT LIQUID	1	CVS NO RD
EAST BULK - #76 GAS BLDNG.	12272-000	G/5 11FT W P CP-746 PRV PSV-24	LIGHT LIQUID	1	CVS NO RD
EAST BULK - #76 GAS BLDNG.	12292-000	G/5 ESD P-747 PRV PSV-106	LIGHT LIQUID	1	CVS NO RD
EAST BULK - #76 GAS BLDNG.	12322-000	G/5 ESD P CP-744 PRV PSV-101	LIGHT LIQUID	1	CVS NO RD
EAST BULK - #76 GAS BLDNG.	2885-000	G/5 ESD P G-506 PRV PSV-84 PRV	LIGHT LIQUID	1	CVS NO RD
EAST BULK - #76 GAS BLDNG.	2900-000	G/4 20FT W P CP-1280 PRV PSV-63	LIGHT LIQUID	1	CVS NO RD
EAST BULK - #76 GAS BLDNG.	50425-000	1/4 3FT NW V F-181 PRV PSV-119	GAS / VAPOR	1	CVS NO RD
EAST BULK - #76 GAS BLDNG.	82797-000	G/3 10FT W F-10 ESD CHEM TOTE	LIGHT LIQUID	0.5	CVS NO RD
EAST BULK - #76 GAS BLDNG.	84071-000	G/7 4FT E P G-501 PRV PSV-86 PRV	LIGHT LIQUID	1	CVS NO RD
EAST BULK - #76 GAS BLDNG.	84076-000	G/5 9FT E P P-1280 PRV PSV-798 PRV	LIGHT LIQUID	1	CVS NO RD
EAST BULK - #76 GAS BLDNG.	12904-000	G/5 NESD P G-1304 PRV PSV-810 PRV	LIGHT LIQUID	0.75	CVS NO RD
EAST BULK - #76 GAS BLDNG.	12910-000	G/5 NESD P G-1303 PRV PSV-809	LIGHT LIQUID	0.75	CVS NO RD
EAST BULK - #76 GAS BLDNG.	12916-000	G/5 NESD P G-1302 PRV PSV-808	LIGHT LIQUID	0.75	CVS NO RD
EAST BULK - #76 GAS BLDNG.	12922-000	G/5 NESD P G-1301 PRV PSV-807	LIGHT LIQUID	0.75	CVS NO RD
EAST BULK - #76 GAS BLDNG.	12982-000	G/4 7FT E P CP-1282 PRV PSV-797	LIGHT LIQUID	0.75	CVS NO RD
EAST BULK - #76 GAS BLDNG.	12991-000	G/4 7FT E P CP-1281 PRV PSV-796	LIGHT LIQUID	0.75	CVS NO RD
EAST BULK - #76 GAS BLDNG.	13032-000	G/4 13FT W P G-1175 PRV PSV-127 PRV	LIGHT LIQUID	0.75	CVS NO RD
EAST BULK - #76 GAS BLDNG.	13059-000	G/4 9FT W P G-1170 PRV PSV-126	LIGHT LIQUID	0.75	CVS NO RD
EAST BULK - #76 GAS BLDNG.	13093-000	G/4 9FT W P G-1171 PRV PSV-125 PRV	LIGHT LIQUID	0.75	CVS NO RD
EAST BULK - #76 GAS BLDNG.	13131-000	G/4 13FT W P G-1176 PRV PSV-124	LIGHT LIQUID	0.75	CVS NO RD
EAST BULK - #76 GAS BLDNG.	13146-000	G/5 ESD P CP-823 PRV PSV-2	LIGHT LIQUID	0.75	CVS NO RD
EAST BULK - #76 GAS BLDNG.	13206-000	G/6 24FT SE P G-18 PRV	LIGHT LIQUID	0.75	CVS NO RD
EAST BULK - #76 GAS BLDNG.	13224-000	1/1 25FT SE P G-18 PRV	LIGHT LIQUID	1	CVS NO RD
EAST BULK - #76 GAS BLDNG.	13226-000	G/5 10FT SE P G-459 PRV	LIGHT LIQUID	0.75	CVS NO RD
EAST BULK - #76 GAS BLDNG.	13235-000	G/5 15FT SE P G-459 PRV PSV-38 PRV	LIGHT LIQUID	0.75	CVS NO RD

Attachment J

Unit	Tag	Location	Service	Size (inches)	Subtype
EAST BULK - #76 GAS BLDNG.	80084-000	G/5 NESD P G-1305 PRV RSV-811 PRV	LIGHT LIQUID	0.75	CVS NO RD
EAST BULK - #76 GAS BLDNG.	12372-000	G/4 155FT SW TK TK-169 PRV PSV-560 PRV	LIGHT LIQUID	0.75	CVS NO RD
EAST BULK - #76 GAS BLDNG.	13305-000	1/0 9FT NW P G-504 PRV	LIGHT LIQUID	1	CVS NO RD
EAST BULK - #76 GAS BLDNG.	13325-000	G/4 24FT NE P G-504 PRV PSV-56	LIGHT LIQUID	0.75	CVS NO RD
EAST BULK - #76 GAS BLDNG.	13336-000	G/3 120FT W P CP-231 PRV N	LIGHT LIQUID	1	CVS NO RD
EAST BULK - #76 GAS BLDNG.	13338-000	G/3 120FT W P CP-231 PRV S	LIGHT LIQUID	1	CVS NO RD
EAST BULK - #76 GAS BLDNG.	13349-000	G/5 155FT SW TK TK-174 PRV	LIGHT LIQUID	1	CVS NO RD
EAST BULK - #76 GAS BLDNG.	13368-000	G/5 5FT SW TK TK-174 PRV PSV-788	LIGHT LIQUID	0.75	CVS NO RD
EAST BULK - #76 GAS BLDNG.	13387-000	G/5 7FT E TK TK-110 PRV PSV-790	LIGHT LIQUID	0.75	CVS NO RD
EAST BULK - #76 GAS BLDNG.	13394-000	G/5 6FT E TK TK-110 PRV PSV-789 PRV	LIGHT LIQUID	0.75	CVS NO RD
EAST BULK - #76 GAS BLDNG.	13398-000	G/5 NESD TK TK-110 PRV PSV-781	LIGHT LIQUID	0.75	CVS NO RD
EAST BULK - #76 GAS BLDNG.	13403-000	G/4 NESD TK TK-110 PRV PSV-805 PRV	LIGHT LIQUID	0.75	CVS NO RD
EAST BULK - #76 GAS BLDNG.	13409-000	G/4 6FT S TK TK-160 PRV PSV-230 PRV	LIGHT LIQUID	0.75	CVS NO RD
EAST BULK - #76 GAS BLDNG.	13412-000	G/4 6FT E TK TK-160 PRV PSV-19 PRV	LIGHT LIQUID	0.75	CVS NO RD
EAST BULK - #76 GAS BLDNG.	13426-000	G/3 SESD TK TK-160 PRV PSV-55 PRV	LIGHT LIQUID	0.75	CVS NO RD
EAST BULK - #76 GAS BLDNG.	13430-000	G/3 SESD TK TK-160 PRV PSV-861 PRV	LIGHT LIQUID	1	CVS NO RD
EAST BULK - #76 GAS BLDNG.	13451-000	G/3 160FT SW TK TK-167 PRV	LIGHT LIQUID	1	CVS NO RD
EAST BULK - #76 GAS BLDNG.	13452-000	G/3 159FT SW TK TK-167 PRV	LIGHT LIQUID	1	CVS NO RD
EAST BULK - #76 GAS BLDNG.	13455-000	G/3 158FT SW TK TK-167 PRV	LIGHT LIQUID	1	CVS NO RD
EAST BULK - #76 GAS BLDNG.	13456-000	G/3 157FT SW TK TK-167 PRV	LIGHT LIQUID	1	CVS NO RD
EAST BULK - #76 GAS BLDNG.	13460-000	G/3 155FT SW TK TK-167 PRV PSV-458 PRV	LIGHT LIQUID	1	CVS NO RD
EAST BULK - #76 GAS BLDNG.	13484-000	G/4 SWSD TK TK-167 PRV PSV-452	LIGHT LIQUID	0.75	CVS NO RD
EAST BULK - #76 GAS BLDNG.	13488-000	G/3 SWSD TK TK-167 PRV PSV-448 PRV	LIGHT LIQUID	1	CVS NO RD
EAST BULK - #76 GAS BLDNG.	13500-000	G/4 6FT S TK TK-167 PRV PSV-442 PRV	LIGHT LIQUID	1	CVS NO RD
EAST BULK - #76 GAS BLDNG.	13505-000	G/4 6FT S TK TK-167 PRV PSV-443 PRV	LIGHT LIQUID	1	CVS NO RD
EAST BULK - #76 GAS BLDNG.	13562-000	G/5 SWSD TK TK-168 PRV PSV-47 PRV	LIGHT LIQUID	1	CVS NO RD
EAST BULK - #76 GAS BLDNG.	13563-000	G/4 SWSD TK TK-168 PRV PSV-120 PRV	LIGHT LIQUID	1	CVS NO RD
EAST BULK - #76 GAS BLDNG.	13574-000	G/4 6FT S TK TK-168 PRV PSV-407 PRV	LIGHT LIQUID	1	CVS NO RD
EAST BULK - #76 GAS BLDNG.	13580-000	G/3 6FT S TK TK-168 PRV PSV-408 PRV	LIGHT LIQUID	1	CVS NO RD
EAST BULK - #76 GAS BLDNG.	13614-000	1/4 149FT SW TK TK-169 PRV	LIGHT LIQUID	1	CVS NO RD
EAST BULK - #76 GAS BLDNG.	13624-000	G/5 SWSD TK TK-169 PRV PSV-451 PRV	LIGHT LIQUID	0.75	CVS NO RD
EAST BULK - #76 GAS BLDNG.	13635-000	G/4 6FT S TK TK-169 PRV PSV-453 PRV	LIGHT LIQUID	0.75	CVS NO RD
EAST BULK - #76 GAS BLDNG.	13640-000	G/4 6FT S TK TK-169 PRV PSV-455 PRV	LIGHT LIQUID	0.75	CVS NO RD
EAST BULK - #76 GAS BLDNG.	13646-000	G/3 174FT SE TK TK-169 PRV PSV-43 PRV	LIGHT LIQUID	0.75	CVS NO RD
EAST BULK - #76 GAS BLDNG.	13648-000	G/3 176FT SE TK TK-169 PRV PSV-47 PRV	LIGHT LIQUID	0.75	CVS NO RD
EAST BULK - #76 GAS BLDNG.	13649-000	G/7 200FT SE TK TK-169 PRV PSV-766 PRV	LIGHT LIQUID	0.75	CVS NO RD
EAST BULK - #76 GAS BLDNG.	13684-000	G/5 151FT N TK TK-105 PRV PSV-183 PRV	LIGHT LIQUID	0.75	CVS NO RD
EAST BULK - #76 GAS BLDNG.	13698-000	G/5 5FT S TK TK-172 PRV PSV-563 PRV	LIGHT LIQUID	1	CVS NO RD
EAST BULK - #76 GAS BLDNG.	13711-000	G/2 SSD TK TK-172 PRV PSV-546 PRV	LIGHT LIQUID	1	CVS NO RD
EAST BULK - #76 GAS BLDNG.	13715-000	G/5 SSD TK TK-172 PRV PSV-517 PRV	LIGHT LIQUID	1	CVS NO RD
EAST BULK - #76 GAS BLDNG.	13720-000	G/5 5FT S TK TK-172 PRV PSV-558 PRV	LIGHT LIQUID	1	CVS NO RD

Attachment J

Unit	Tag	Location	Service	Size (inches)	Subtype
EAST BULK - #76 GAS BLDNG.	13728-000	G/4 WSD TK TK-170 PRV PSV-544 PRV	LIGHT LIQUID	1	CVS NO RD
EAST BULK - #76 GAS BLDNG.	13730-000	G/2 WSD TK TK-170 PRV PSV-545 PRV	LIGHT LIQUID	1	CVS NO RD
EAST BULK - #76 GAS BLDNG.	13740-000	G/4 SSD TK TK-170 PRV PSV-557 PRV	LIGHT LIQUID	1	CVS NO RD
EAST BULK - #76 GAS BLDNG.	13744-000	G/4 SSD TK TK-170 PRV PSV-562 PRV	LIGHT LIQUID	1	CVS NO RD
EAST BULK - #76 GAS BLDNG.	83951-000	G/4 WSD TK TK-174 PRV PSV-441 PRV	LIGHT LIQUID	1	CVS NO RD
EAST BULK - #76 GAS BLDNG.	83953-000	G/5 5FT SW TK TK-174 PRV PSV-444	LIGHT LIQUID	0.75	CVS NO RD
EAST BULK - #80 REF. OIL SHIPG.	31074-000	/3 80FT NW BLDG 80 CONTROL ROOM PRV PSV-5	LIGHT LIQUID	0.75	CVS NO RD
EAST BULK - #80 REF. OIL SHIPG.	31122-000	G/2 60FT N BLDG 80 CONTROL ROOM PRV PSV-2(	LIGHT LIQUID	0.75	CVS NO RD
EAST BULK - #80 REF. OIL SHIPG.	31128-000	G/7 50FT NE BLDG 80 CONTROL ROOM PRV	GAS / VAPOR	0.75	CVS NO RD
EAST BULK - #80 REF. OIL SHIPG.	31161-000	G/2 20FT NW CNR F ST. & ROAD 8 PRV PSV-18	LIGHT LIQUID	0.75	CVS NO RD
EAST BULK - #80 REF. OIL SHIPG.	31163-000	G/2 21FT NW CNR F ST. & ROAD 8 PRV PSV-17	LIGHT LIQUID	0.75	CVS NO RD
EAST BULK - #80 REF. OIL SHIPG.	31165-000	G/11 25FT NW CNR F ST. & ROAD 8 PRV	LIGHT LIQUID	0.75	CVS NO RD
EAST BULK - #80 REF. OIL SHIPG.	31244-000	G/7 65FT NE TK TK-203 PRV PSV-748	LIGHT LIQUID	0.75	CVS NO RD
EAST BULK - #80 REF. OIL SHIPG.	31278-000	G/2 20FT NE CNR J ST & ROAD 8 PRV PSV-593	LIGHT LIQUID	0.75	CVS NO RD
EAST BULK - #80 REF. OIL SHIPG.	31283-000	G/3 18FT NE CNR J ST & ROAD 8 PRV PSV-174	LIGHT LIQUID	0.75	CVS NO RD
EAST BULK - #80 REF. OIL SHIPG.	31317-000	G/2 87FT E CNR J ST & ROAD 8 PRV PSV-714	LIGHT LIQUID	0.75	CVS NO RD
EAST BULK - #80 REF. OIL SHIPG.	31330-000	G/2 5FT NE CNR M ST & ROAD 8 PRV PSV-820	LIGHT LIQUID	0.75	CVS NO RD
EAST BULK - #80 REF. OIL SHIPG.	31332-000	G/2 20FT NE CNR M ST & ROAD 8 PRV PSV-574	LIGHT LIQUID	0.75	CVS NO RD
EAST BULK - #80 REF. OIL SHIPG.	31337-000	G/-3 20FT E CNR M ST & ROAD 8 NWSD LN 501	LIGHT LIQUID	0.75	CVS NO RD
EAST BULK - #80 REF. OIL SHIPG.	31347-000	G/-1 29FT E CNR M ST & ROAD 8 SWSD LN 301	LIGHT LIQUID	0.75	CVS NO RD
EAST BULK - #80 REF. OIL SHIPG.	31355-000	G/3 33FT E CNR M ST & ROAD 8 PRV PSV-512	LIGHT LIQUID	0.75	CVS NO RD
EAST BULK - #80 REF. OIL SHIPG.	31357-000	G/3 33FT NE CNR M ST & ROAD 8 PRV PSV-521	LIGHT LIQUID	0.75	CVS NO RD
EAST BULK - #80 REF. OIL SHIPG.	31360-000	G/3 34FT NE CNR M ST & ROAD 8 PRV PSV-524	LIGHT LIQUID	0.75	CVS NO RD
EAST BULK - #80 REF. OIL SHIPG.	31362-000	G/3 35FT NE CNR M ST & ROAD 8 PRV PSV-513	LIGHT LIQUID	0.75	CVS NO RD
EAST BULK - #80 REF. OIL SHIPG.	31364-000	G/3 38FT NE CNR M ST & ROAD 8 PRV PSV-503	LIGHT LIQUID	0.75	CVS NO RD
EAST BULK - #80 REF. OIL SHIPG.	31366-000	G/3 39FT NE CNR M ST & ROAD 8 PRV PSV-571	LIGHT LIQUID	0.75	CVS NO RD
EAST BULK - #80 REF. OIL SHIPG.	31368-000	G/3 45FT NE CNR M ST & ROAD 8 PRV PSV-718	LIGHT LIQUID	0.75	CVS NO RD
EAST BULK - #80 REF. OIL SHIPG.	31413-000	G/3 57FT E CNR M ST & ROAD 8 PRV PSV-513	LIGHT LIQUID	0.75	CVS NO RD
EAST BULK - #80 REF. OIL SHIPG.	31415-000	G/3 58FT E CNR M ST & ROAD 8 PRV PSV-670	LIGHT LIQUID	0.75	CVS NO RD
EAST BULK - #80 REF. OIL SHIPG.	31417-000	G/5 60FT NE CNR M ST & ROAD 8 PRV PSV-426	LIGHT LIQUID	0.75	CVS NO RD
EAST BULK - #80 REF. OIL SHIPG.	31418-000	G/5 61FT NE CNR M ST & ROAD 8 PRV PSV-427	LIGHT LIQUID	0.75	CVS NO RD
EAST BULK - #80 REF. OIL SHIPG.	31425-000	G/3 63FT NE CNR M ST & ROAD 8 PRV PSV-569	LIGHT LIQUID	0.75	CVS NO RD
EAST BULK - #80 REF. OIL SHIPG.	31537-000	G/4 50FT S TK TK-288 PRV PSV-767	LIGHT LIQUID	0.75	CVS NO RD
EAST BULK - #80 REF. OIL SHIPG.	31544-000	G/5 51FT S TK TK-288 PRV PSV-763	LIGHT LIQUID	0.75	CVS NO RD
EAST BULK - #80 REF. OIL SHIPG.	31551-000	G/11 20FT NE CNR F ST. & ROAD 8 PRV	LIGHT LIQUID	0.75	CVS NO RD
EAST BULK - #80 REF. OIL SHIPG.	31553-000	G/7 57FT N TK TK-201 PRV PSV-732	LIGHT LIQUID	0.75	CVS NO RD
EAST BULK - #80 REF. OIL SHIPG.	31554-000	G/7 58FT NW TK TK-201 PRV PSV-731	LIGHT LIQUID	0.75	CVS NO RD
EAST BULK - #80 REF. OIL SHIPG.	31564-000	i/-2 52FT E CNR M ST & ROAD 8 SWSD LN 309 PR	LIGHT LIQUID	0.75	CVS NO RD
EAST BULK - #80 REF. OIL SHIPG.	80547-000	G/6 10FT NE CNR F ST. & ROAD 8 PRV PSV-66	LIGHT LIQUID	0.75	CVS NO RD
EAST BULK - #80 REF. OIL SHIPG.	80548-000	G/3 18FT NE CNR J ST & ROAD 8 PRV PSV-470	LIGHT LIQUID	0.75	CVS NO RD
EAST BULK - #80 REF. OIL SHIPG.	34392-000	G/14 10FT NW P G-630 PRV PSV-83	LIGHT LIQUID	1	CVS NO RD

Attachment J

Unit	Tag	Location	Service	Size (inches)	Subtype
EAST BULK - #80 REF. OIL SHIPG.	37778-000	G/14 12FT NW P G-630 PRV PSV	LIGHT LIQUID	1	CVS NO RD
EAST BULK - #80 REF. OIL SHIPG.	16296-000	G/2 21FT N P G-631 PRV PSV	LIGHT LIQUID	0.5	CVS NO RD
EAST BULK - #80 REF. OIL SHIPG.	29933-000	G/4 7FT NE P G-631 PRV PSV 86	LIGHT LIQUID	0.75	CVS NO RD
EAST BULK - #80 REF. OIL SHIPG.	29959-000	G/5 10FT NW P G-631 PRV PSV-90	LIGHT LIQUID	0.75	CVS NO RD
EAST BULK - #80 REF. OIL SHIPG.	29981-000	G/4 7FT NE P G-630 PRV PSV-84	LIGHT LIQUID	0.75	CVS NO RD
EAST BULK - #80 REF. OIL SHIPG.	30005-000	G/12 9FT N P G-4 PRV PSV-1440	LIGHT LIQUID	1	CVS NO RD
EAST BULK - #80 REF. OIL SHIPG.	30016-000	G/5 17FT SW P G-3 PRV PSV-31	LIGHT LIQUID	1	CVS NO RD
EAST BULK - #80 REF. OIL SHIPG.	30025-000	G/9 4FT S P G-101 PRV PSV-39	LIGHT LIQUID	1	CVS NO RD
EAST BULK - #80 REF. OIL SHIPG.	30043-000	G/2 20FT NW P G-101 PRV PSV-29	LIGHT LIQUID	1	CVS NO RD
EAST BULK - #80 REF. OIL SHIPG.	30119-000	G/9 13FT E P G-2 PRV PSV-16	LIGHT LIQUID	1	CVS NO RD
EAST BULK - #80 REF. OIL SHIPG.	30126-000	G/9 17FT E P G-1 PRV PSV-15	LIGHT LIQUID	1	CVS NO RD
EAST BULK - #80 REF. OIL SHIPG.	30159-000	G/6 18FT S P G-101 PRV PSV-31	LIGHT LIQUID	0.75	CVS NO RD
EAST BULK - #80 REF. OIL SHIPG.	30182-000	G/6 6FT W P G-3 PRV PSV-43	LIGHT LIQUID	0.75	CVS NO RD
EAST BULK - #80 REF. OIL SHIPG.	30189-000	G/6 8FT NW P G-3 PRV PSV-23	LIGHT LIQUID	0.75	CVS NO RD
EAST BULK - #80 REF. OIL SHIPG.	30238-000	G/5 13FT NE P G-7 PRV PSV-1	LIGHT LIQUID	0.75	CVS NO RD
EAST BULK - #80 REF. OIL SHIPG.	30254-000	G/9 25FT NE P G-7 PRV PSV-4	LIGHT LIQUID	0.75	CVS NO RD
EAST BULK - #80 REF. OIL SHIPG.	30259-000	G/4 23FT NE P G-7 PRV PSV-2	LIGHT LIQUID	0.75	CVS NO RD
EAST BULK - #80 REF. OIL SHIPG.	30271-000	G/5 24FT N P G-7 PRV PSV-3	LIGHT LIQUID	0.75	CVS NO RD
EAST BULK - #80 REF. OIL SHIPG.	30309-000	G/5 5FT NW P G-5 PRV PSV-12	LIGHT LIQUID	0.75	CVS NO RD
EAST BULK - #80 REF. OIL SHIPG.	30315-000	G/5 4FT NW P G-5 PRV PSV-9	LIGHT LIQUID	0.75	CVS NO RD
EAST BULK - #80 REF. OIL SHIPG.	30319-000	G/5 3FT NW P G-5 PRV PSV-10	LIGHT LIQUID	0.75	CVS NO RD
EAST BULK - #80 REF. OIL SHIPG.	30328-000	G/3 13FT NW P G-5 PRV PSV-22	LIGHT LIQUID	0.75	CVS NO RD
EAST BULK - #80 REF. OIL SHIPG.	30330-000	G/3 12FT NW P G-5 PRV PSV-23	LIGHT LIQUID	0.75	CVS NO RD
EAST BULK - #80 REF. OIL SHIPG.	30332-000	G/9 11FT NW P G-5 PRV PSV-46	LIGHT LIQUID	0.75	CVS NO RD
EAST BULK - #80 REF. OIL SHIPG.	30338-000	G/5 26FT NW P G-5 PRV PSV-13	LIGHT LIQUID	0.75	CVS NO RD
EAST BULK - #80 REF. OIL SHIPG.	30343-000	G/7 15FT N P G-2 PRV PSV-47	LIGHT LIQUID	0.75	CVS NO RD
EAST BULK - #80 REF. OIL SHIPG.	30349-000	G/7 15FT N P G-2 PRV PSV-48	LIGHT LIQUID	0.75	CVS NO RD
EAST BULK - #80 REF. OIL SHIPG.	30356-000	G/5 20FT NW P G-2 PRV PSV-33	LIGHT LIQUID	0.75	CVS NO RD
EAST BULK - #80 REF. OIL SHIPG.	30360-000	G/5 25FT NW P G-2 PRV PSV-35	LIGHT LIQUID	0.75	CVS NO RD
EAST BULK - #80 REF. OIL SHIPG.	30364-000	G/5 25FT NE P G-101 PRV PSV-32	LIGHT LIQUID	0.75	CVS NO RD
EAST BULK - #80 REF. OIL SHIPG.	30369-000	G/5 ESD WEST BATT LIMIT	LIGHT LIQUID	0.75	CVS NO RD
EAST BULK - #80 REF. OIL SHIPG.	30380-000	G/3 MID WEST BATT LIMIT PRV	LIGHT LIQUID	0.75	CVS NO RD
EAST BULK - #80 REF. OIL SHIPG.	30392-000	G/4 WSD WEST BATT LIMIT PRV	LIGHT LIQUID	0.75	CVS NO RD
EAST BULK - #80 REF. OIL SHIPG.	30404-000	G/5 NSD WEST BATT LIMIT PRV PSV-51	LIGHT LIQUID	0.75	CVS NO RD
EAST BULK - #80 REF. OIL SHIPG.	34399-000	G/2 9FT W P G-5 PRV PSV-89	LIGHT LIQUID	1	CVS NO RD
EAST BULK - #80 REF. OIL SHIPG.	81138-000	G/8 18FT S P G-101	LIGHT LIQUID	1	CVS NO RD
EAST BULK - #80 REF. OIL SHIPG.	81807-000	G/3 13FT SE P G-2 PRV PSV-6	LIGHT LIQUID	1	CVS NO RD
EAST BULK - #80 REF. OIL SHIPG.	30849-000	G/4 SSD TK TK-1007 PRV PSV-787	LIGHT LIQUID	0.75	CVS NO RD
EAST BULK - #80 REF. OIL SHIPG.	30857-000	G/4 SSD TK TK-1007 PRV PSV-795	LIGHT LIQUID	0.75	CVS NO RD
EAST BULK - #80 REF. OIL SHIPG.	31001-000	G/3 115FT S TK TK-1001 PRV PSV-765	LIGHT LIQUID	1	CVS NO RD
EAST BULK - #80 REF. OIL SHIPG.	31003-000	G/3 113FT S TK TK-1001 PRV PSV-150	LIGHT LIQUID	1	CVS NO RD

Attachment J

Unit	Tag	Location	Service	Size (inches)	Subtype
EAST BULK - #80 REF. OIL SHIPG.	31007-000	G/3 112FT S TK TK-1001 PRV PSV-505	LIGHT LIQUID	1	CVS NO RD
EAST BULK - #80 REF. OIL SHIPG.	31010-000	G/3 111FT S TK TK-1001 PRV PSV-502	LIGHT LIQUID	1	CVS NO RD
EAST BULK - #80 REF. OIL SHIPG.	31012-000	G/3 110FT S TK TK-1001 PRV PSV-500	LIGHT LIQUID	1	CVS NO RD
EAST BULK - #80 REF. OIL SHIPG.	31018-000	G/3 114FT S TK TK-1001 PRV PSV-676	LIGHT LIQUID	1	CVS NO RD
EAST BULK - #80 REF. OIL SHIPG.	50052-000	G/4 SSD TK TK-1004 PRV PSV-530	LIGHT LIQUID	1	CVS NO RD
EAST BULK - #80 REF. OIL SHIPG.	50065-000	G/4 3FTS TK TK-1004 PRV PSV-528	LIGHT LIQUID	0.75	CVS NO RD
EAST BULK - #80 REF. OIL SHIPG.	50894-000	G/3 2FT S TK TK-1003 PRV	LIGHT LIQUID	1	CVS NO RD
EAST BULK - #80 REF. OIL SHIPG.	50910-000	G/4 4FT SE TK TK-1003 PRV	LIGHT LIQUID	1	CVS NO RD
EAST BULK - #80 REF. OIL SHIPG.	52412-000	G/3 5FT S TK TK-1002 PRV PSV-532	LIGHT LIQUID	0.75	CVS NO RD
EAST BULK - #80 REF. OIL SHIPG.	52418-000	G/3 SESD TK TK-1002 PRV PSV--536	LIGHT LIQUID	0.75	CVS NO RD
EAST BULK - #80 REF. OIL SHIPG.	82734-000	G/4 SSD TK TK-1001 PRV PSV-51	LIGHT LIQUID	0.75	CVS NO RD
EAST BULK - #80 REF. OIL SHIPG.	82803-000	G/4 SWSD TK TK-1001 PRV PSV-537	LIGHT LIQUID	0.75	CVS NO RD
EAST BULK - #80 REF. OIL SHIPG.	30476-000	G/3 SWSD TK TK-292 PRV PSV-240	LIGHT LIQUID	0.75	CVS NO RD
EAST BULK - #80 REF. OIL SHIPG.	30489-000	G/5 6FT W TK TK-292 PRV PSV-855	LIGHT LIQUID	0.75	CVS NO RD
EAST BULK - #80 REF. OIL SHIPG.	30497-000	G/5 6FT W TK TK-292 PRV PSV-854	LIGHT LIQUID	0.75	CVS NO RD
EAST BULK - #80 REF. OIL SHIPG.	30502-000	G/3 NWSD TK TK-101 PRV PSV-85	LIGHT LIQUID	0.75	CVS NO RD
EAST BULK - #80 REF. OIL SHIPG.	30520-000	G/4 8FT W TK TK-210 PRV PSV-712	LIGHT LIQUID	0.75	CVS NO RD
EAST BULK - #80 REF. OIL SHIPG.	30524-000	G/3 8FT W TK TK-210 PRV PSV-713	LIGHT LIQUID	0.75	CVS NO RD
EAST BULK - #80 REF. OIL SHIPG.	30544-000	G/5 10FT S TK TK-241 PRV PSV-111	LIGHT LIQUID	0.75	CVS NO RD
EAST BULK - #80 REF. OIL SHIPG.	30562-000	G/4 SWSD TK TK-241 PRV PSV-100	LIGHT LIQUID	0.75	CVS NO RD
EAST BULK - #80 REF. OIL SHIPG.	30608-000	G/4 8FT W TK TK-243 PRV PSV-784	LIGHT LIQUID	0.75	CVS NO RD
EAST BULK - #80 REF. OIL SHIPG.	30616-000	G/4 8FT W TK TK-243 PRV PSV-785	LIGHT LIQUID	0.75	CVS NO RD
EAST BULK - #80 REF. OIL SHIPG.	30636-000	G/5 10FT SW TK TK-281 PRV PCV-623	GAS / VAPOR	2	CVS NO RD
EAST BULK - #80 REF. OIL SHIPG.	30678-000	G/4 SSD TK TK-287 PRV PSV-567	LIGHT LIQUID	0.75	CVS NO RD
EAST BULK - #80 REF. OIL SHIPG.	30681-000	G/4 SSD TK TK-287 PRV PSV-565	LIGHT LIQUID	0.75	CVS NO RD
EAST BULK - #80 REF. OIL SHIPG.	30689-000	G/3 SWSD TK TK-287 PRV PSV-577	LIGHT LIQUID	0.75	CVS NO RD
EAST BULK - #80 REF. OIL SHIPG.	30691-000	G/4 SWSD TK TK-287 PRV PSV-575	LIGHT LIQUID	0.75	CVS NO RD
EAST BULK - #80 REF. OIL SHIPG.	81444-000	G/4 9FT S TK TK-241 PRV PSV-74	LIGHT LIQUID	0.75	CVS NO RD
EAST BULK - #80 REF. OIL SHIPG.	81521-000	G/3 6FT E TK TK-242 PRV PSV-852	LIGHT LIQUID	0.75	CVS NO RD
EAST BULK - #80 REF. OIL SHIPG.	81522-000	G/3 6FT E TK TK-242 PRV PSV-496	LIGHT LIQUID	0.75	CVS NO RD
EAST BULK - #80 REF. OIL SHIPG.	81633-000	G/6 SESD TK TK-291 PRV PSV-245	LIGHT LIQUID	0.75	CVS NO RD
EAST BULK - #80 REF. OIL SHIPG.	81651-000	G/4 6FT E TK TK-291 ESD PFRM PSV-1013	LIGHT LIQUID	0.75	CVS NO RD
EAST BULK - #80 REF. OIL SHIPG.	81653-000	G/4 6FT E TK TK-291 ESD PFRM PSV-1013	LIGHT LIQUID	0.75	CVS NO RD
EAST BULK - #80 REF. OIL SHIPG.	82023-000	G/4 6FT N TK TK-101 PRV PSV-11	LIGHT LIQUID	0.75	CVS NO RD
EAST BULK - #80 REF. OIL SHIPG.	82024-000	G/4 6FT N TK TK-101 PRV PSV-10	LIGHT LIQUID	0.75	CVS NO RD
EAST BULK - #80 REF. OIL SHIPG.	83318-000	G/5 NWSD TK TK-210 PRV PSV-723	LIGHT LIQUID	0.75	CVS NO RD
HYDROCRACKER - #246	50703-000	1/5 30FT NW P 8G-817B PRV	GAS / VAPOR	3	CVS NO RD
HYDROCRACKER - #246	50704-000	2/5 30FT NW P 8G-817B PRV	GAS / VAPOR	2	CVS NO RD
HYDROCRACKER - #246	50707-000	2/4 34FT NW P 8G-817B PRV	GAS / VAPOR	2	CVS NO RD
HYDROCRACKER - #246	50943-000	1/2 13FT W E 8E-804 PRV PSV-121	GAS / VAPOR	2	CVS NO RD
HYDROCRACKER - #246	6082-000	T/6 ESD V 8F-802 PRV PSV-1	GAS / VAPOR	4	CVS NO RD

Attachment J

Unit	Tag	Location	Service	Size (inches)	Subtype
HYDROCRACKER - #246	84811-000	3/4 SWSD V 8F-808 PRV PSV-75	LIGHT LIQUID	1	CVS NO RD
HYDROCRACKER - #246	29922-000	G/5 SESD AH 246-AT-003 PRV PSV-300	GAS / VAPOR	0.5	CVS NO RD
HYDROCRACKER - #246	4603-000	G/5 23FT SE V V-806 PRV 8PSV-78	GAS / VAPOR	1	CVS NO RD
HYDROCRACKER - #246	4631-000	G/5 24FT S V V-806 PRV 8PSV-79 PRV	GAS / VAPOR	1	CVS NO RD
HYDROCRACKER - #246	5116-000	4/9 6FT S FF 8E-826B PRV PSV-4	GAS / VAPOR	6	CVS NO RD
HYDROCRACKER - #246	5128-000	4/7 6FT S FF 8E-826C PRV PSV-7	GAS / VAPOR	6	CVS NO RD
HYDROCRACKER - #246	51578-000	4/6 6FT SW FF 8E-826A PRV PSV-6	GAS / VAPOR	3	CVS NO RD
HYDROCRACKER - #246	5161-000	4/7 6FT N FF 8E-828C PRV 8PSV-27B PRV	GAS / VAPOR	6	CVS NO RD
HYDROCRACKER - #246	5170-000	4/7 6FT N FF 8E-828C PRV 8PSV-27A PRV	GAS / VAPOR	6	CVS NO RD
HYDROCRACKER - #246	5175-000	4/7 20FT N E 8E-834 PRV 8PSV-30B PRV	GAS / VAPOR	8	CVS NO RD
HYDROCRACKER - #246	5185-000	4/7 20FT N E 8E-834 PRV 8PSV-30A PRV	GAS / VAPOR	6	CVS NO RD
HYDROCRACKER - #246	5190-000	4/6 6FT N FF 8E-828A PRV PV-29 PRV	GAS / VAPOR	3	CVS NO RD
HYDROCRACKER - #246	5209-000	4/7 6FT N FF 8E-826C PRV 8PSV-3 PRV	GAS / VAPOR	8	CVS NO RD
HYDROCRACKER - #246	5217-000	4/6 6FT N FF 8E-819B PRV 8PSV-5A PRV	GAS / VAPOR	4	CVS NO RD
HYDROCRACKER - #246	5222-000	4/6 6FT N FF 8E-819B PRV 8PSV-5B PRV	GAS / VAPOR	4	CVS NO RD
HYDROCRACKER - #246	60086-000	4/6 6FT N FF 8E-826D PRV 8PSV-12 PRV	GAS / VAPOR	3	CVS NO RD
HYDROCRACKER - #246	80331-000	4/4 8FT S FF 8E-818C PRV PSV-42	GAS / VAPOR	1.5	CVS NO RD
HYDROCRACKER - #246	80397-000	4/6 6FT N FF 8E-828A PRV 8PSV-31 PRV	GAS / VAPOR	3	CVS NO RD
MP30/SULFUR - #228 ISOMERIZATION	19671-000	4/4 7FT NE V F-545 PRV PSV-570	GAS / VAPOR	2	CVS NO RD
MP30/SULFUR - #228 ISOMERIZATION	19682-000	1/6 SSD V F-522 PRV PSV-513	GAS / VAPOR	1.5	CVS NO RD
MP30/SULFUR - #228 ISOMERIZATION	19698-000	1/6 SSD V F-525 PRV PSV-515	GAS / VAPOR	1.5	CVS NO RD
MP30/SULFUR - #228 ISOMERIZATION	19722-000	1/6 NSD V F-524 PRV PSV-516	GAS / VAPOR	1.5	CVS NO RD
MP30/SULFUR - #228 ISOMERIZATION	19731-000	1/6 NSD V F-523 PRV PSV-514	GAS / VAPOR	1.5	CVS NO RD
MP30/SULFUR - #228 ISOMERIZATION	19755-000	1/6 WSD V F-520 PRV	GAS / VAPOR	4	CVS NO RD
MP30/SULFUR - #228 ISOMERIZATION	19780-000	1/6 WSD V D-521 PRV	GAS / VAPOR	1.5	CVS NO RD
MP30/SULFUR - #228 ISOMERIZATION	19986-000	1/5 6FT E V F-523 PRV PSV-512	GAS / VAPOR	4	CVS NO RD
MP30/SULFUR - #228 ISOMERIZATION	20006-000	2/2 SESD E E-524B PSV-404	GAS / VAPOR	4	CVS NO RD
MP30/SULFUR - #228 ISOMERIZATION	20011-000	2/3 NWSD E E-524B PSV-519	GAS / VAPOR	4	CVS NO RD
MP30/SULFUR - #228 ISOMERIZATION	20110-000	1/6 NSD V F-526 PSV-518	GAS / VAPOR	1.5	CVS NO RD
MP30/SULFUR - #228 ISOMERIZATION	20124-000	1/6 ESD V F-526 PSV-522	GAS / VAPOR	2	CVS NO RD
MP30/SULFUR - #228 ISOMERIZATION	21674-000	G/3 5FT S V F-533 PRV PSV-538	GAS / VAPOR	1.5	CVS NO RD
MP30/SULFUR - #228 ISOMERIZATION	21678-000	G/2 5FT S V F-532 PRV PSV-537	GAS / VAPOR	1.5	CVS NO RD
MP30/SULFUR - #228 ISOMERIZATION	21682-000	G/2 5FT S V F-531 PRV PSV-536	GAS / VAPOR	1.5	CVS NO RD
MP30/SULFUR - #228 ISOMERIZATION	21686-000	G/2 4FT S V F-530 PRV PSV-535	GAS / VAPOR	1.5	CVS NO RD
MP30/SULFUR - #228 ISOMERIZATION	19338-000	G/30 10FT SE V F-560 PRV-539	GAS / VAPOR	4	CVS NO RD
MP30/SULFUR - #228 ISOMERIZATION	19340-000	G/30 10FT S V F-560 PRV PSV-385	GAS / VAPOR	2	CVS NO RD
MP30/SULFUR - #228 ISOMERIZATION	19342-000	G/30 15FT S C GB-522 PRV PSV-546	GAS / VAPOR	1	CVS NO RD
MP30/SULFUR - #228 ISOMERIZATION	19347-000	G/30 12FT SE E E-562 PRV PSV-544	GAS / VAPOR	1	CVS NO RD
MP30/SULFUR - #228 ISOMERIZATION	19349-000	G/30 12FT S E E-562 PRV PSV-545	GAS / VAPOR	1.5	CVS NO RD
MP30/SULFUR - #228 ISOMERIZATION	11592-000	G/2 8FT N P G-555A PRV PSV-918	GAS / VAPOR	0.25	CVS NO RD
MP30/SULFUR - #228 ISOMERIZATION	19036-000	G/3 11FT NE P G-310 PRV PCV-455	LIGHT LIQUID	2	CVS NO RD

Attachment J

Unit	Tag	Location	Service	Size (inches)	Subtype
MP30/SULFUR - #228 ISOMERIZATION	19080-000	G/12 18FT NW P G-310 PRV PRV-919	LIGHT LIQUID	1	CVS NO RD
MP30/SULFUR - #228 ISOMERIZATION	19097-000	1/4 12FT N E E-317 SSD PFRM PRV	LIGHT LIQUID	2	CVS NO RD
MP30/SULFUR - #228 ISOMERIZATION	20972-000	3/4 NESD T D-511 PRV PSV-502	GAS / VAPOR	6	CVS NO RD
MP30/SULFUR - #228 ISOMERIZATION	21117-000	T/4 MID T F-510 PRV PSV-501	GAS / VAPOR	3	CVS NO RD
MP30/SULFUR - #228 ISOMERIZATION	21359-000	G/4 22FT N P G-540A PRV PSV-914	LIGHT LIQUID	1.5	CVS NO RD
MP30/SULFUR - #236 SULFUR PLANT	31624-000	2/5 13FT S FF E-934A PRV PSV-935	GAS / VAPOR	0.75	CVS NO RD
MP30/SULFUR - #236 SULFUR PLANT	31625-000	2/6 15FT S FF E-934A PRV PSV-934	GAS / VAPOR	3	CVS NO RD
MP30/SULFUR - #236 SULFUR PLANT	31641-000	3/6 NESD FF E-934A PRV PSV-936	GAS / VAPOR	6	CVS NO RD
MP30/SULFUR - #236 SULFUR PLANT	31685-000	T/6 ESD T D-803 PRV PSV-27	GAS / VAPOR	6	CVS NO RD
MP30/SULFUR - #236 SULFUR PLANT	31757-000	1/2 SSD V F-817 PRV PSV-100	GAS / VAPOR	6	CVS NO RD
MP30/SULFUR - #236 SULFUR PLANT	31760-000	1/6 9FT NE V F-803 PRV PSV-494C	GAS / VAPOR	2	CVS NO RD
MP30/SULFUR - #236 SULFUR PLANT	31783-000	1/4 NWSD V F-803 PRV PSV-12	GAS / VAPOR	8	CVS NO RD
MP30/SULFUR - #236 SULFUR PLANT	31854-000	T/4 SSD V F-809 PRV PSV-21	GAS / VAPOR	6	CVS NO RD
MP30/SULFUR - #236 SULFUR PLANT	31857-000	T/4 SSD V F-809 PRV PSV-20	GAS / VAPOR	6	CVS NO RD
MP30/SULFUR - #236 SULFUR PLANT	43612-000	3/4 NESD T D-911 PRV PSV-10	GAS / VAPOR	4	CVS NO RD
MP30/SULFUR - #236 SULFUR PLANT	43689-000	1/4 10FT N V F-902 PRV PSV-8	GAS / VAPOR	4	CVS NO RD
MP30/SULFUR - #236 SULFUR PLANT	43765-000	1/0 SSD V F-107 PRV PSV-10	GAS / VAPOR	2	CVS NO RD
MP30/SULFUR - #236 SULFUR PLANT	43810-000	3/6 ESD T D-901 PRV PSV-8	GAS / VAPOR	6	CVS NO RD
MP30/SULFUR - #236 SULFUR PLANT	43836-000	2/8 5FT NW E E-902 PRV PSV-4	GAS / VAPOR	0.75	CVS NO RD
MP30/SULFUR - #236 SULFUR PLANT	43845-000	2/5 NSD V F-703 PRV PSV2	GAS / VAPOR	1.5	CVS NO RD
MP30/SULFUR - #236 SULFUR PLANT	43985-000	2/6 TOP V F-921 PRV PSV-517	GAS / VAPOR	3	CVS NO RD
MP30/SULFUR - #236 SULFUR PLANT	43996-000	2/3 SWSD T D-921 PRV PSV-519	GAS / VAPOR	3	CVS NO RD
MP30/SULFUR - #236 SULFUR PLANT	50179-000	2/4 NSD F-701 PRV PSV-1	GAS / VAPOR	2	CVS NO RD
MP30/SULFUR - #236 SULFUR PLANT	50219-000	1/7 MID V F-10 PRV PSV-11	GAS / VAPOR	3	CVS NO RD
MP30/SULFUR - #236 SULFUR PLANT	81437-000	T/1 SSD TK-805 PSV	GAS / VAPOR	3	CVS NO RD
MP30/SULFUR - #236 SULFUR PLANT	81450-000	1/3 NSD FF E-922 PRV PSV-518	GAS / VAPOR	1	CVS NO RD
MP30/SULFUR - #236 SULFUR PLANT	31908-000	G/35 SWSD P HC-3201 PRV PSV-19	GAS / VAPOR	4	CVS NO RD
MP30/SULFUR - #238 SULFUR PLANT	81456-000	1/4 ABV V F-601 PRV PSV-1	GAS / VAPOR	1.5	CVS NO RD
MP30/SULFUR - #238 SULFUR PLANT	81458-000	1/4 ABV V F-602 PRV PSV-2	GAS / VAPOR	1.5	CVS NO RD
MP30/SULFUR - (229-230-231)	16419-000	G/6 20FT NW P G-400 PRV PSV-10	GAS / VAPOR	3	CVS NO RD
MP30/SULFUR - (229-230-231)	17013-000	G/10 WSD TK F-112 PRV	GAS / VAPOR	1	CVS NO RD
MP30/SULFUR - (229-230-231)	17017-000	G/10 WSD TK F-122 PRV	GAS / VAPOR	1	CVS NO RD
MP30/SULFUR - (229-230-231)	18807-000	G/2 SWSD P G-123 PRV PSV-72	LIGHT LIQUID	0.5	CVS NO RD
MP30/SULFUR - (229-230-231)	18808-000	G/2 ABV P G-121 PRV PSV-5	LIGHT LIQUID	0.5	CVS NO RD
MP30/SULFUR - (229-230-231)	17361-000	3/5 SESD T D-140	GAS / VAPOR	3	CVS NO RD
MP30/SULFUR - (229-230-231)	17736-000	1/11 TOP V F-210 PRV	GAS / VAPOR	3	CVS NO RD
MP30/SULFUR - (229-230-231)	17757-000	T/6 WSD T D-303 PRV	GAS / VAPOR	3	CVS NO RD
MP30/SULFUR - (229-230-231)	18057-000	4/5 TOP T D-208 PRV PSV-38	GAS / VAPOR	3	CVS NO RD
MP30/SULFUR - (229-230-231)	18060-000	5/1 SSD T D-202 PRV PSV-17	GAS / VAPOR	3	CVS NO RD
MP30/SULFUR - (229-230-231)	18127-000	G/6 SSD E E-219 PRV	LIGHT LIQUID	0.5	CVS NO RD
MP30/SULFUR - (229-230-231)	18271-000	T/3 SSD V F-213 PRV	GAS / VAPOR	3	CVS NO RD

Attachment J

Unit	Tag	Location	Service	Size (inches)	Subtype
MP30/SULFUR - (229-230-231)	18523-000	G/13 SWSD V F-106 PRV	GAS / VAPOR	2	CVS NO RD
MP30/SULFUR - (229-230-231)	82513-000	T/2 WSD V D-105 PRV PSV-106	GAS / VAPOR	3	CVS NO RD
MP30/SULFUR - (229-230-231)	83222-000	T/3 ESD V D-106 PRV PSV-107A	GAS / VAPOR	6	CVS NO RD
MP30/SULFUR - (229-230-231)	83225-000	T/3 ESD V D-106 PRV PSV-107B	GAS / VAPOR	6	CVS NO RD
MP30/SULFUR - (229-230-231)	83422-000	3/3 SSD V D-205 PRV	GAS / VAPOR	6	CVS NO RD
MP30/SULFUR - (229-230-231)	83606-000	2/5 8FT S E E-226 PRV PSV-57	LIGHT LIQUID	4	CVS NO RD
MP30/SULFUR - (229-230-231)	84223-000	T/1 SSD V D-201 PRV PSV-19	LIGHT LIQUID	4	CVS NO RD
MP30/SULFUR - (229-230-231)	16015-000	G/20 ESD P G-104	LIGHT LIQUID	2	CVS NO RD
MP30/SULFUR - (229-230-231)	16063-000	G/15 NSD E E-314 PRV PRV	GAS / VAPOR	1	CVS NO RD
MP30/SULFUR - (229-230-231)	16129-000	G/20 NWSD P G-205 PRV PRV	LIGHT LIQUID	3	CVS NO RD
MP30/SULFUR - (229-230-231)	14983-000	G/5 SSD C GB-201B PRV PSV-18 PRV	GAS / VAPOR	4	CVS NO RD
MP30/SULFUR - (229-230-231)	15044-000	1/5 MID V F-204 PRV PSV-209 PRV	GAS / VAPOR	3	CVS NO RD
MP30/SULFUR - (229-230-231)	15050-000	1/5 MID V F-204 PRV PSV-209A PRV	GAS / VAPOR	3	CVS NO RD
MP30/SULFUR - (229-230-231)	15509-000	1/5 SSD V F-303 PRV PSV-4 PRV	GAS / VAPOR	1	CVS NO RD
MP30/SULFUR - (229-230-231)	15616-000	1/7 WSD V F-302 PRV PSV-5 PRV	GAS / VAPOR	2	CVS NO RD
MP30/SULFUR - (229-230-231)	15687-000	G/8 SSD C GB-301A	GAS / VAPOR	3	CVS NO RD
MP30/SULFUR - (229-230-231)	15869-000	G/8 PRV FF D-310	GAS / VAPOR	2	CVS NO RD
MP30/SULFUR - (229-230-231)	53400-000	T/5 NWSD RX D-101 PSV-49	GAS / VAPOR	4	CVS NO RD
MP30/SULFUR - (229-230-231)	81919-000	T/3 MID V F-102 PRV PSV-9	GAS / VAPOR	6	CVS NO RD
MP30/SULFUR - (229-230-231)	82004-000	T/4 NESD V F-102 PRV PSV-16 PRV	GAS / VAPOR	0.75	CVS NO RD
MP30/SULFUR - (229-230-231)	82563-000	G/5 SSD C GB-201A PRV PSV-15 PRV	GAS / VAPOR	4	CVS NO RD
MP30/SULFUR - (229-230-231)	83141-000	G/4 SSD C GB-301 PRV PSV-7	GAS / VAPOR	4	CVS NO RD
MP30/SULFUR - (229-230-231)	83237-000	4/7 WSD T D-302 PRV PSV-1	GAS / VAPOR	3	CVS NO RD
MP30/SULFUR - (229-230-231)	15916-000	G/15 10FT S V F-201A-2A 10FT SW C GM-201A	GAS / VAPOR	1	CVS NO RD
MP30/SULFUR - (229-230-231)	15923-000	G/19 SWSD V F-212 PRV PSV-44	GAS / VAPOR	1	CVS NO RD
UNICRACKER - #240 UNICRACKER	37613-000	3/4 8FT E V 1F-107 PRV PSV-24	GAS / VAPOR	3	CVS NO RD
UNICRACKER - #240 UNICRACKER	37666-000	G/7 TOP V 1F-112 PRV PSV-20	GAS / VAPOR	1	CVS NO RD
UNICRACKER - #240 UNICRACKER	60100-000	3/4 8FT W V 1F-105 PRV PSV-13	GAS / VAPOR	4	CVS NO RD
UNICRACKER - #240 UNICRACKER	07105-000	3/3 12FT W C GB-203A PRV 2PSV-5	GAS / VAPOR	2	CVS NO RD
UNICRACKER - #240 UNICRACKER	37812-000	G/9 NESD E 2E-216 PRV PSV-12	GAS / VAPOR	3	CVS NO RD
UNICRACKER - #240 UNICRACKER	38114-000	3/4 13FT W C GB-203A PRV 2PSV-3	GAS / VAPOR	3	CVS NO RD
UNICRACKER - #240 UNICRACKER	38208-000	1/5 SESD E 3FF-335 PRV PSV-69	GAS / VAPOR	3	CVS NO RD
UNICRACKER - #240 UNICRACKER	38412-000	T/7 NESD V 2F-201 PRV 2PSV-54	GAS / VAPOR	2	CVS NO RD
UNICRACKER - #240 UNICRACKER	38465-000	2/6 25FT NE V 2F-201 PRV PSV-30	GAS / VAPOR	3	CVS NO RD
UNICRACKER - #240 UNICRACKER	38470-000	2/7 28FT NE V 2F-201 PRV PSV-31	GAS / VAPOR	3	CVS NO RD
UNICRACKER - #240 UNICRACKER	53505-000	T/5 MID T 2F-202 PRV PSV-29	GAS / VAPOR	6	CVS NO RD
UNICRACKER - #240 UNICRACKER	53510-000	3/4 15FT W C GB-203B PRV PSV-9	GAS / VAPOR	3	CVS NO RD
UNICRACKER - #240 UNICRACKER	53800-000	3/5 7FT NE V 2F-203 WSD PRV	GAS / VAPOR	3	CVS NO RD
UNICRACKER - #240 UNICRACKER	53844-000	3/4 15FT W C GB-203B PRV PSV-11	GAS / VAPOR	3	CVS NO RD
UNICRACKER - #240 UNICRACKER	39014-000	G/20 WSD E 2E-212A PRV	GAS / VAPOR	3	CVS NO RD
UNICRACKER - #240 UNICRACKER	09700-000	3/4 ESD T 3D-301 PRV PSV-34	GAS / VAPOR	6	CVS NO RD

Attachment J

Unit	Tag	Location	Service	Size (inches)	Subtype
UNICRACKER - #240 UNICRACKER	09800-000	3/4 ESD T 3D-301 PRV PSV-34	GAS / VAPOR	6	CVS NO RD
UNICRACKER - #240 UNICRACKER	39614-000	T/7 MID T 3D-301 PRV PSV-96	GAS / VAPOR	8	CVS NO RD
UNICRACKER - #240 UNICRACKER	39811-000	2/7 WSD V 3F-304 PRV PSV-23	GAS / VAPOR	1.5	CVS NO RD
UNICRACKER - #240 UNICRACKER	40789-000	2/-5 12FT W T 2F-202 PRV PSV-4	GAS / VAPOR	3	CVS NO RD
UNICRACKER - #240 UNICRACKER	40816-000	1/5 SSD FF 3E-310 PRV PSV-68	GAS / VAPOR	1.5	CVS NO RD
UNICRACKER - #240 UNICRACKER	40821-000	1/5 SSD FF 3E-310 PRV PSV-69	GAS / VAPOR	2	CVS NO RD
UNICRACKER - #240 UNICRACKER	40824-000	1/5 SSD FF 3E-310 PRV PSV-74	GAS / VAPOR	1.5	CVS NO RD
UNICRACKER - #240 UNICRACKER	40832-000	2/5 NSD FF 3E-310 PRV PSV-46	GAS / VAPOR	6	CVS NO RD
UNICRACKER - #240 UNICRACKER	40836-000	3/2 NSD FF 3E-310 PRV PSV-8E	GAS / VAPOR	8	CVS NO RD
UNICRACKER - #240 UNICRACKER	40838-000	3/2 NSD FF 3E-310 PRV PSV-8D	GAS / VAPOR	8	CVS NO RD
UNICRACKER - #240 UNICRACKER	40839-000	3/2 NSD FF 3E-310 PRV PSV-8C	GAS / VAPOR	8	CVS NO RD
UNICRACKER - #240 UNICRACKER	40841-000	3/2 NSD FF 3E-310 PRV PSV-8B	GAS / VAPOR	8	CVS NO RD
UNICRACKER - #240 UNICRACKER	40842-000	3/2 NSD FF 3E-310 PRV PSV-8A	GAS / VAPOR	8	CVS NO RD
UNICRACKER - #240 UNICRACKER	53165-000	T/5 CENTER OF 3F-306 PSV	GAS / VAPOR	6	CVS NO RD
UNICRACKER - #240 UNICRACKER	53166-000	T/5 CENTER OF 3F-306	GAS / VAPOR	10	CVS NO RD
UNICRACKER - #240 UNICRACKER	53550-000	2/4 WSD T 3D-303 PRV PSV-6	GAS / VAPOR	3	CVS NO RD
UNICRACKER - #240 UNICRACKER	40859-000	G/30 10FT S E 3E-302 PRV	GAS / VAPOR	2	CVS NO RD
UNICRACKER - #240 UNICRACKER	50411-000	G/20 ESD V 3F-305	GAS / VAPOR	1	CVS NO RD
UNICRACKER - #240 UNICRACKER	50412-000	G/20 ESD V 3F-305	GAS / VAPOR	1	CVS NO RD
UNICRACKER - #240 UNICRACKER	32706-000	1/4 8FT SE V 31F-45 PRV 31PSV-39	GAS / VAPOR	2	CVS NO RD
UNICRACKER - #240 UNICRACKER	42565-000	2/4 6FT NESE T 4D-401 PRV PSV-1	GAS / VAPOR	4	CVS NO RD
UNICRACKER - #240 UNICRACKER	42567-000	2/4 4FT SE T 4D-402 PRV PSV-5	GAS / VAPOR	3	CVS NO RD
UNICRACKER - #240 UNICRACKER	43026-000	/4 20FT NE C 4G-425 INSIDE AH ATO-437/438 PR\	GAS / VAPOR	1	CVS NO RD
UNICRACKER - #240 UNICRACKER	43033-000	G/5 4FT E V 4F-437 PRV 4PSV-63	GAS / VAPOR	1	CVS NO RD
UNICRACKER - #240 UNICRACKER	43054-000	G/5 SSD V 4F-437 PRV 4PSV-64	GAS / VAPOR	1	CVS NO RD
UNICRACKER - #240 UNICRACKER	51535-000	T/4 TOP T 4D-411 PRV PSV-77	GAS / VAPOR	6	CVS NO RD
UNICRACKER - #240 UNICRACKER	84226-000	2/4 SESD T 4D-402 PRV PSV-2	GAS / VAPOR	2	CVS NO RD
UNICRACKER - #244 REFORMING	35362-000	2/3 20FT N H 5B-505 PRV PSV-15	GAS / VAPOR	1	CVS NO RD
UNICRACKER - #244 REFORMING	35585-000	2/4 NSD FF 5E-505 PRV PSV-29	GAS / VAPOR	1.5	CVS NO RD
UNICRACKER - #244 REFORMING	35659-000	2/3 TOP V 5F-502 PRV PSV-3	GAS / VAPOR	4	CVS NO RD
UNICRACKER - #244 REFORMING	35928-000	1/6 TOP V 5F-526 PRV PSV-526	GAS / VAPOR	1	CVS NO RD
UNICRACKER - #244 REFORMING	35950-000	1/7 WSD V 5F-527 PRV PSV-527	GAS / VAPOR	1.5	CVS NO RD
UNICRACKER - #244 REFORMING	36268-000	2/4 48FT N H 5B-507 PRV PSV-33	GAS / VAPOR	2	CVS NO RD
UNICRACKER - #244 REFORMING	51227-000	1/6 7FT NW V 5F-503 NSD INST	GAS / VAPOR	0.25	CVS NO RD
UNICRACKER - #244 REFORMING	53767-000	6/3 TOP T 5D-506 PRV PSV-7244	GAS / VAPOR	6	CVS NO RD
UNICRACKER - #244 REFORMING	53769-000	2/3 SSD FF 5E-505 PRV PSV-34	GAS / VAPOR	2	CVS NO RD
UNICRACKER - #244 REFORMING	60395-000	1/5 WSD V 5F-503 PRV PSV-6	GAS / VAPOR	2	CVS NO RD
UNICRACKER - #244 REFORMING	80340-000	G/4 5FT N V 5F-506 PRV PSV-9	LIGHT LIQUID	0.5	CVS NO RD
UNICRACKER - #248 UNISAR	36568-000	2/7 TOP V 6F-602	GAS / VAPOR	4	CVS NO RD
UNICRACKER - #248 UNISAR	36594-000	2/7 SWSD V 6F-602	GAS / VAPOR	1	CVS NO RD
UNICRACKER - #248 UNISAR	36738-000	2/7 10FT E V 6F-605 PRV PSV-8	GAS / VAPOR	1.5	CVS NO RD

Attachment J

Unit	Tag	Location	Service	Size (inches)	Subtype
UNICRACKER - #248 UNISAR	36902-000	G/12 NSD P 6G-606B	GAS / VAPOR	1	CVS NO RD
UNICRACKER - #248 UNISAR	36972-000	2/7 NESD V 6F-606 PRV 6PSV-18	GAS / VAPOR	6	CVS NO RD
UNICRACKER - #248 UNISAR	37027-000	1/3 NWSD FF E-502A PRV PRV-9	GAS / VAPOR	4	CVS NO RD
UNICRACKER - #248 UNISAR	50191-000	2/6 WSD V 6F-601 PRV PSV-12	GAS / VAPOR	3	CVS NO RD
UNICRACKER - #248 UNISAR	53526-000	2/7 10FT W V 6F-605 PRV PSV-7	GAS / VAPOR	1.5	CVS NO RD
UNICRACKER - #248 UNISAR	37117-000	G/30 15FT SW E 6E-603 PRV	GAS / VAPOR	6	CVS NO RD
UNICRACKER- #250 ULSD	1965-000	1/6 60FT S C GB-701 PSV-11 PRV	GAS / VAPOR	3	CVS NO RD
UNICRACKER- #250 ULSD	1968-000	1/6 50FT S C GB-701 PSV-23 PRV	GAS / VAPOR	1.5	CVS NO RD
UNICRACKER- #250 ULSD	1971-000	1/6 45FT S C GB-701 PSV-45 PRV	GAS / VAPOR	1.5	CVS NO RD
UNICRACKER- #250 ULSD	1976-000	1/6 35FT S C GB-701 PSV-22 PRV	GAS / VAPOR	1.5	CVS NO RD
UNICRACKER- #250 ULSD	1992-000	1/6 40FT S C GB-701 PSV-46 PRV	GAS / VAPOR	1.5	CVS NO RD
UNICRACKER- #250 ULSD	2119-000	1/7 8FT S C GB-701 N PRV	GAS / VAPOR	0.75	CVS NO RD
UNICRACKER- #250 ULSD	2415-000	1/5 25FT NE T D-711 PRV PSV-1 PRV	LIGHT LIQUID	1.5	CVS NO RD
UNICRACKER- #250 ULSD	2416-000	1/5 25FT NE T D-711 PRV PSV-2 PRV	LIGHT LIQUID	1.5	CVS NO RD
UNICRACKER- #250 ULSD	2445-000	T/6 SESD T D-711 PRV	GAS / VAPOR	4	CVS NO RD
UNICRACKER- #250 ULSD	2588-000	G/3 ESD AH AIT-281 PRV PSV-2800	GAS / VAPOR	0.25	CVS NO RD
UNICRACKER- #250 ULSD	2594-000	G/3 ESD AH AIT-281 PRV PSV-280A	GAS / VAPOR	0.25	CVS NO RD
UNICRACKER- #250 ULSD	3797-000	G/5 ESD AH AIT-281 PRV PSV-281A	GAS / VAPOR	0.25	CVS NO RD
UNICRACKER- #250 ULSD	1286-000	2/5 8FT E V D-714 PRV PSV-34	GAS / VAPOR	3	CVS NO RD
UNICRACKER- #250 ULSD	1289-000	2/5 10FT NE V D-714 PRV PSV-41	GAS / VAPOR	3	CVS NO RD
UNICRACKER- #250 ULSD	1296-000	2/10 ESD V D-714 PRV PSV-40	GAS / VAPOR	2	CVS NO RD
UNICRACKER- #250 ULSD	1479-000	1/4 SSD V D-702 PRV PSV-4	GAS / VAPOR	4	CVS NO RD
UNICRACKER- #250 ULSD	1486-000	1/4 WSD FF EF-704D PRV PSV-9	GAS / VAPOR	3	CVS NO RD
UNICRACKER- #250 ULSD	1690-000	1/5 5FT NE RX D-703 PRV PSV-6	GAS / VAPOR	1	CVS NO RD
UNICRACKER- #250 ULSD	50086-000	3/5 22FT NW E E-708 PRV PSV-3	GAS / VAPOR	1.5	CVS NO RD
UNICRACKER- #250 ULSD	50088-000	G/30 9FT E E E-703A PRV PSV-93	GAS / VAPOR	4	CVS NO RD
UNICRACKER- #250 ULSD	80867-000	T/7 SWSD T D-710 PRV PSV-15	GAS / VAPOR	8	CVS NO RD
UNICRACKER- #250 ULSD	84220-000	2/1 4FT N V D-713 PRV PSV-25	LIGHT LIQUID	1.5	CVS NO RD
WEST BULK - #110 HYDROGEN PLANT	7467-000	G/8 NWSD V V-1 PRV	GAS / VAPOR	1.5	CVS NO RD
WEST BULK - #110 HYDROGEN PLANT	7485-000	G/6 SSD V ME-103 PRV	GAS / VAPOR	2	CVS NO RD
WEST BULK - #110 HYDROGEN PLANT	7510-000	G/6 12FT SE V ME-103 PRV	GAS / VAPOR	2	CVS NO RD
WEST BULK - #110 HYDROGEN PLANT	7627-000	1/9 20FT N E E-5 PRV	LIGHT LIQUID	0.75	CVS NO RD
WEST BULK - #110 HYDROGEN PLANT	7640-000	1/9 30FT N E E-5 PRV	LIGHT LIQUID	1	CVS NO RD
WEST BULK - #110 HYDROGEN PLANT	7750-000	G/4 6FT S V V-22 PRV PSV-72	GAS / VAPOR	2	CVS NO RD
WEST BULK - #110 HYDROGEN PLANT	7753-000	G/4 6FT S V V-24 PRV PSV-74	GAS / VAPOR	2	CVS NO RD
WEST BULK - #110 HYDROGEN PLANT	7756-000	G/4 6FT S V V-26 PRV PSV-76	GAS / VAPOR	2	CVS NO RD
WEST BULK - #110 HYDROGEN PLANT	7759-000	G/4 6FT S V V-28 PRV PSV-78	GAS / VAPOR	2	CVS NO RD
WEST BULK - #110 HYDROGEN PLANT	7762-000	G/4 6FT S V V-30 PRV PSV-80	GAS / VAPOR	2	CVS NO RD
WEST BULK - #110 HYDROGEN PLANT	7769-000	G/4 6FT N V V-29 PRV PSV-79	GAS / VAPOR	2	CVS NO RD
WEST BULK - #110 HYDROGEN PLANT	7774-000	G/4 6FT N V V-27 PRV PSV-77	GAS / VAPOR	2	CVS NO RD
WEST BULK - #110 HYDROGEN PLANT	7775-000	G/4 6FT N V V-25 PRV PSV-75	GAS / VAPOR	2	CVS NO RD

Attachment J

Unit	Tag	Location	Service	Size (inches)	Subtype
WEST BULK - #110 HYDROGEN PLANT	7778-000	G/4 6FT N V V-23 PRV PSV-73	GAS / VAPOR	2	CVS NO RD
WEST BULK - #110 HYDROGEN PLANT	7783-000	G/4 6FT N V V-21 PRV PSV-71	GAS / VAPOR	2	CVS NO RD
WEST BULK - #110 HYDROGEN PLANT	80849-000	1/12 8FT N C CM-1 110-PSV-100	GAS / VAPOR	4	CVS NO RD
WEST BULK - #110 HYDROGEN PLANT	8333-000	T/4 3FT S V V-1 PRV	GAS / VAPOR	3	CVS NO RD
WEST BULK - #110 HYDROGEN PLANT	7831-000	G/6 17FT NE V V-12 PRV PSV-101-1	GAS / VAPOR	6	CVS NO RD
WEST BULK - #110 HYDROGEN PLANT	7883-000	T/5 CTR V V-8 PRV PSV-7	GAS / VAPOR	6	CVS NO RD
WEST BULK - #110 HYDROGEN PLANT	7926-000	2/5 NESD FF E-7 PRV	GAS / VAPOR	3	CVS NO RD
WEST BULK - #110 HYDROGEN PLANT	7988-000	3/5 6FT N V V-4 PRV PSV-115	GAS / VAPOR	6	CVS NO RD
WEST BULK - #110 HYDROGEN PLANT	8301-000	1/2 NSD V V-2 PRV	GAS / VAPOR	2	CVS NO RD
WEST BULK - #3 STM. POWER PLT.	10130-000	G/2 10FT E SUB STATION 8B PRV PSV-590	LIGHT LIQUID	1	CVS NO RD
WEST BULK - #3 STM. POWER PLT.	9335-000	T/4 ESD V F-17 PRV PSV-154	GAS / VAPOR	2	CVS NO RD
WEST BULK - #3 STM. POWER PLT.	9385-000	G/6 ABV V F-39 PRV PSV-164	GAS / VAPOR	2	CVS NO RD
WEST BULK - #3 STM. POWER PLT.	9442-000	1/4 10FT SW C G-17C PRV PSV-311 PRV	GAS / VAPOR	2	CVS NO RD
WEST BULK - #3 STM. POWER PLT.	9472-000	1/4 13FT SW C G-17B PRV PSV-211 PRV	LIGHT LIQUID	2	CVS NO RD
WEST BULK - #3 STM. POWER PLT.	9501-000	1/7 8FT E E E-01B PRV PSV-179 PRV	GAS / VAPOR	3	CVS NO RD
WEST BULK - #3 STM. POWER PLT.	9508-000	1/4 13FT SW C G-17A PRV PSV-111 PRV	GAS / VAPOR	3	CVS NO RD
WEST BULK - #3 STM. POWER PLT.	9615-000	G/3 NSD V F-37 PRV PSV-946	GAS / VAPOR	2	CVS NO RD
WEST BULK - #3 STM. POWER PLT.	10103-000	G/2 183FT SW H B-3A PRV PSV-220	LIGHT LIQUID	0.75	CVS NO RD
WEST BULK - #3 STM. POWER PLT.	10109-000	G/2 186FT SW H B-3A PRV PSV-216	LIGHT LIQUID	0.75	CVS NO RD
WEST BULK - MARINE TERMINAL	80367-000	1/4 NSD P G-16 PRV	LIGHT LIQUID	1.5	CVS NO RD
WEST BULK - MARINE TERMINAL	8608-000	G/4 ESD P G-15 PRV	LIGHT LIQUID	1.5	CVS NO RD
WEST BULK - MARINE TERMINAL	34489-000	1/4 5FT W TCLR ME-6B PRV PSV-133	GAS / VAPOR	1.5	CVS NO RD
WEST BULK - MARINE TERMINAL	34543-000	1/4 4FT W TCLR ME-8B PRV PSV-136	GAS / VAPOR	1	CVS NO RD
WEST BULK - MARINE TERMINAL	34586-000	1/4 49FT W TCLR 23ME-3 PRV PSV-6 LN BUTANE	LIGHT LIQUID	0.75	CVS NO RD
WEST BULK - MARINE TERMINAL	34590-000	1/3 49FT W TCLR 23ME-3 PRV PSV-7	LIGHT LIQUID	0.75	CVS NO RD
WEST BULK - MARINE TERMINAL	34599-000	1/6 40FT W TCLR 23ME-3 PRV PSV-12	LIGHT LIQUID	0.75	CVS NO RD
WEST BULK - MARINE TERMINAL	34646-000	G/6 SSD D F-304 PRV PSV-8	GAS / VAPOR	0.75	CVS NO RD
WEST BULK - MARINE TERMINAL	34786-000	G/6 7FT W P 23G-2 PRV PSV-10	LIGHT LIQUID	0.75	CVS NO RD
WEST BULK - MARINE TERMINAL	34807-000	G/6 7FT NW P 23G-2 PRV PSV-4	LIGHT LIQUID	0.75	CVS NO RD
WEST BULK - MARINE TERMINAL	34832-000	1/6 BTM TK F-302 PRV PSV-3	LIGHT LIQUID	0.75	CVS NO RD
WEST BULK - MARINE TERMINAL	50024-000	T/3 SWSD TK TK-302 PRV PSV-1	GAS / VAPOR	6	CVS NO RD
WEST BULK - MARINE TERMINAL	50025-000	T/3 SWSD TK TK-302 PRV PSV-1A	GAS / VAPOR	1	CVS NO RD
WEST BULK - MARINE TERMINAL	50028-000	T/3 SSD TK TK-302 PRV PSV-2A	GAS / VAPOR	1	CVS NO RD
WEST BULK - MARINE TERMINAL	50029-000	T/3 SSD TK TK-302 PRV PSV-2	GAS / VAPOR	6	CVS NO RD
WEST BULK - MARINE TERMINAL	83304-000	G/1 14FT S P G-182 PRV	LIGHT LIQUID	1	CVS NO RD
WEST BULK - MARINE TERMINAL	83305-000	G/4 29FT SE P G-182 PRV PSV-118 PRV	LIGHT LIQUID	1	CVS NO RD
WEST BULK - MARINE TERMINAL	9017-000	G/6 SSD TK TK-103 PRV PSV-610 PRV	LIGHT LIQUID	1	CVS NO RD
WEST BULK - MARINE TERMINAL	9029-000	G/5 NESD P GM-2 PRV PSV-606 PRV	LIGHT LIQUID	1.5	CVS NO RD
WEST BULK - MARINE TERMINAL	9101-000	G/5 19FT S P G-870 PRV PSV-96 PRV	LIGHT LIQUID	0.75	CVS NO RD
WEST BULK - MARINE TERMINAL	9117-000	G/5 18FT S P G-870 PRV PSV-99 PRV	LIGHT LIQUID	0.75	CVS NO RD
WEST BULK - MARINE TERMINAL	9121-000	G/7 22FT S P G-870 PRV PSV-88 PRV	LIGHT LIQUID	0.75	CVS NO RD

Attachment J

Unit	Tag	Location	Service	Size (inches)	Subtype
WEST BULK - MARINE TERMINAL	9132-000	G/4 36FT S P G-181 W PRV PSV-130 PRV	LIGHT LIQUID	0.75	CVS NO RD
WEST BULK - MARINE TERMINAL	9182-000	G/5 36FT S P G-181 E PRV PSV-128 PRV	LIGHT LIQUID	0.75	CVS NO RD
WEST BULK - MARINE TERMINAL	9188-000	G/2 36FT S P G-181 PRV PSV-102 PRV	LIGHT LIQUID	1	CVS NO RD
WEST BULK - MARINE TERMINAL	9223-000	G/3 14FT S P G-182 PRV	LIGHT LIQUID	1	CVS NO RD
WEST BULK - MARINE TERMINAL	8374-000	G/14 10FT SW P G-28 PRV PRV-81 PRV	LIGHT LIQUID	0.75	CVS NO RD
WEST BULK - MARINE TERMINAL	8376-000	G/14 15FT SE P G-28 PRV RV-300 PRV	LIGHT LIQUID	1	CVS NO RD
WEST BULK - MARINE TERMINAL	8378-000	G/14 16FT SE P G-28 PRV RV-307 PRV	LIGHT LIQUID	1	CVS NO RD
WEST BULK - MARINE TERMINAL	8380-000	G/14 17FT SE P G-28 PRV RV-299 PRV	LIGHT LIQUID	1	CVS NO RD
WEST BULK - MARINE TERMINAL	8382-000	G/14 18FT SE P G-28 PRV RV-304 PRV	LIGHT LIQUID	1	CVS NO RD
WEST BULK - MARINE TERMINAL	8384-000	G/14 19FT SE P G-28 PRV RV-303 PRV	LIGHT LIQUID	1	CVS NO RD
WEST BULK - MARINE TERMINAL	8386-000	G/14 25FT SE P G-28 PRV RV-308 PRV	LIGHT LIQUID	1	CVS NO RD
WEST BULK - MARINE TERMINAL	8388-000	G/14 26FT SE P G-28 PRV RV-297 PRV	LIGHT LIQUID	1	CVS NO RD
WEST BULK - MARINE TERMINAL	8390-000	G/14 30FT SE P G-28 PRV RV-694 PRV	LIGHT LIQUID	0.75	CVS NO RD
WEST BULK - MARINE TERMINAL	8392-000	G/14 35FT SE P G-28 PRV RV-296 PRV	LIGHT LIQUID	0.75	CVS NO RD
WEST BULK - MARINE TERMINAL	8394-000	G/14 40FT SE P G-28 PRV RV-695 PRV	LIGHT LIQUID	0.75	CVS NO RD
WEST BULK - MARINE TERMINAL	34933-000	G/3 60FT E TK TK-531 PRV PSV-7-65	LIGHT LIQUID	1	CVS NO RD
WEST BULK - MARINE TERMINAL	34937-000	G/2 40FT E TK TK-531 PRV PSV-226	LIGHT LIQUID	1	CVS NO RD
WEST BULK - MARINE TERMINAL	34942-000	G/2 11FT W TK TK-531 PRV PSV-746	GAS / VAPOR	2	CVS NO RD
WEST BULK - MARINE TERMINAL	16669-000	G/5 SWSD TK TK-100 PRV PSV-6	LIGHT LIQUID	0.75	CVS NO RD
WEST BULK - MARINE TERMINAL	34876-000	G/4 SWSD TK TK-100 PRV	LIGHT LIQUID	0.75	CVS NO RD
WEST BULK - MARINE TERMINAL	34885-000	G/5 SWSD TK TK-100 PRV PSV-7	LIGHT LIQUID	0.75	CVS NO RD
WEST BULK - MARINE TERMINAL	34912-000	G/7 NWSD P 20G-100 PRV	LIGHT LIQUID	0.75	CVS NO RD

Attachment K – Flare Construction

Flare	**Main Flare (S-296)**	**MP30 Flare (S-398)**
Flare Type	Elevated	Elevated
Type of Assist System	Steam	Steam
Emergency or Non-Emergency	Emergency (SU/SD, emergency)	Emergency (SU/SD, emergency)
Equipped with Flare Gas Recovery	Yes	Yes
Flare Height	250' – See Att. C	225' – See Att C
Pipe Diameter	5' – See Att C	4' – See Att C
Tip Diameter, ft		
Outside	5'	5.75'
Effective	5'	4.13'
Number of Pilots	4 – See Section 2.2.3.1	4 – See Section 2.2.3.2
Ignition System	Automatic	Automatic
Number of Steam Injection Nozzles	2 steam injection headers (2" & 6") and a Callidus BTZ-US upper steam flare tip.	2 steam injection headers (3" & 6") and a Callidus BTZ-IS3 multiple internal steam injection system.
Capacity [1] (i.e. Max Vent Gas Flow)	689 ton/hr	488 ton/hr
Smokeless Capacity (15 min avg) [2]	412,850 lb/hr	317,000 lb/hr
Maximum Supplemental Gas Flow	102 MSCFH	130 MSCFH
Minimum Total Steam Rate	4,000 lb/hr	2,500 lb/hr
Maximum Total Steam Rate	90,000 lb/hr	80,000 lb/hr
Date of Construction [3]	1970 approx , Tip Replaced 1996	2000
Location of Purge Gas Insertion	See Attachment B, Section titled "Main Flare Purge Gas Requirements" for details. See also Att C for placement on PFD.	See Attachment B, Section titled "MP-30 Flare Operation" for details. See also Att C for placement on PFD.

[1] Capacity provided is based on expected flow from total power failure. Flare system likely able to handle larger flow. Main design factor for flare tip diameter is gas exit velocity. Generally, flares are sized to permit a velocity of up to 0.5 Mach for short-term, peak, conditions with 0.2 Mach for normal conditions.

[2] Based on 3rd party flare tip vendor analysis.

[3] Per email correspondence on October 28, 2015 between an industry representative and the designated NSPS Ja Rule Contact, EPA has indicated that Confidential Business Information should not be included in Flare Management Plans. Consequently, the facility is not submitting the confidential flare tip schematic and P&IDs with this flare management plan. The flare tip schematic and P&IDs are available on site for EPA review.

Attachment N

Cost Effectiveness Calculation Background Material

Attachment M

Fuel Gas System Overview

The fuel gas system is composed of three major components. Unit 233 Fuel Gas Cleanup, Unit 215 Merichem and Unit 246/Air Liquide Fuel Gas (RFG B). Unit 233 receives sour gas streams and cleans them up for re-use in facility combustion devices (refinery heaters and the Steam Power Plant Turbines). The feeds to Unit 233 include gasses from:

- G-503 Flare Gas Recovery Compressor
- G-540 A/B/C Flare Gas Recovery Compressors
- Unit 200 Odor Abatement Compressor
- Unit 200 Light Ends, primarily composed of gasses from G-501 Wet Gas Compressor
- Unicracker Sour Gas Make
- Units 228, 230, 231, & 215 Sour Gas

Once these gasses are cleaned, butane and natural gas is added to supplement the fuel supply. The primary considerations for fuel include pressure, sulfur content, specific gravity, and BTU content. The normal operating range for fuel gas pressure is 72 to 74 psig. The pressure is continuously monitored. As the pressure decreases below the desired pressure natural gas is automatically added. All the heaters at the facility are subject to EPA's New Source Performance Standard (NSPS) Subpart J for combustion devices. This requires that the fuel fired to the heater not have Hydrogen Sulfide (H_2S) content greater than 162 ppmv. An H2S analyzer is in place to continuously measure H_2S content to ensure compliance with the limit.

Additionally, the heaters at the facility are subject to a Sulfur Dioxide (SO_2) bubble as described in the Plant 16 Title V Permit Condition No. 1694. This requires that the fuel gas be sampled for Total Reduced Sulfur (TRS) three (3) times per day and that speciated sulfur sampling be performed on a monthly basis in order to calculate the SO_2 emissions associated with combustion. Specific gravity (sg) monitoring is the primary means in which gas quality is assured. Adjustments are made to the amount of butane added to fuel gas to control specific gravity. There are continuous specific gravity analyzers in a number of fuel gas headers throughout the refinery. As a secondary means of monitoring there is a Wobbe analyzer which determines the higher heating value (HHV) of the fuel gas. Attachment L and Section 2.2.3.3 provides details as to the type of monitoring performed at the Flare Gas Compressor. This gas is more variable then the other feeds to Unit 233. As described in Attachment L, the flare gas recovery compressor is shutdown if the gasses being sent to the compressor are not suitable for recovery.

A slip stream from U233, after cleanup, is sent to Unit 215 Merichem for further sulfur removal. There are two heaters on site which have more stringent sulfur standards for our Ultra Low Sulfur Diesel Project requiring the fuel from Unit 233 to undergo further sulfur removal. Lastly, as part of our Clean Fuels Project we have an additional lower sulfur standard for the fuel being sent to Unit 246. This fuel termed RFG B can be a blend of natural gas, U233 gas, U215 fuel gas, and Unicracker Sweet Gas (RFG A). The Unicracker Sweet Gas is depicted on the fuel gas diagram. This is a low H_2S content gas that comes off of the Unit 240-4 D-401 H2S Absorber. It is also used as hydrogen plant feed gas.

See the drawing contained in this section for a schematic of the fuel gas system. The schematic illustrates the primary gas producers and consumers. The main consumers can be grouped as follows based on fuel supply:

- Refinery Heaters – U233 Fuel Gas
- New Refinery Heaters at Unit 200 & U250 (post-2004) – U215 Merichem
- Steam Power Plant – U233 Fuel Gas, Natural Gas, Unicracker Sweet Gas
- Unit 110 Hydrogen Plant Furnace H-1 - U233 Fuel Gas, Natural Gas, Unicracker Sweet Gas
- Unit 246 Heater – RFG B Fuel Gas or individual fuel components

Confidential

Phillips, Rodeo Refinery - Simplified Heater / SPP Fuel Gas Overview

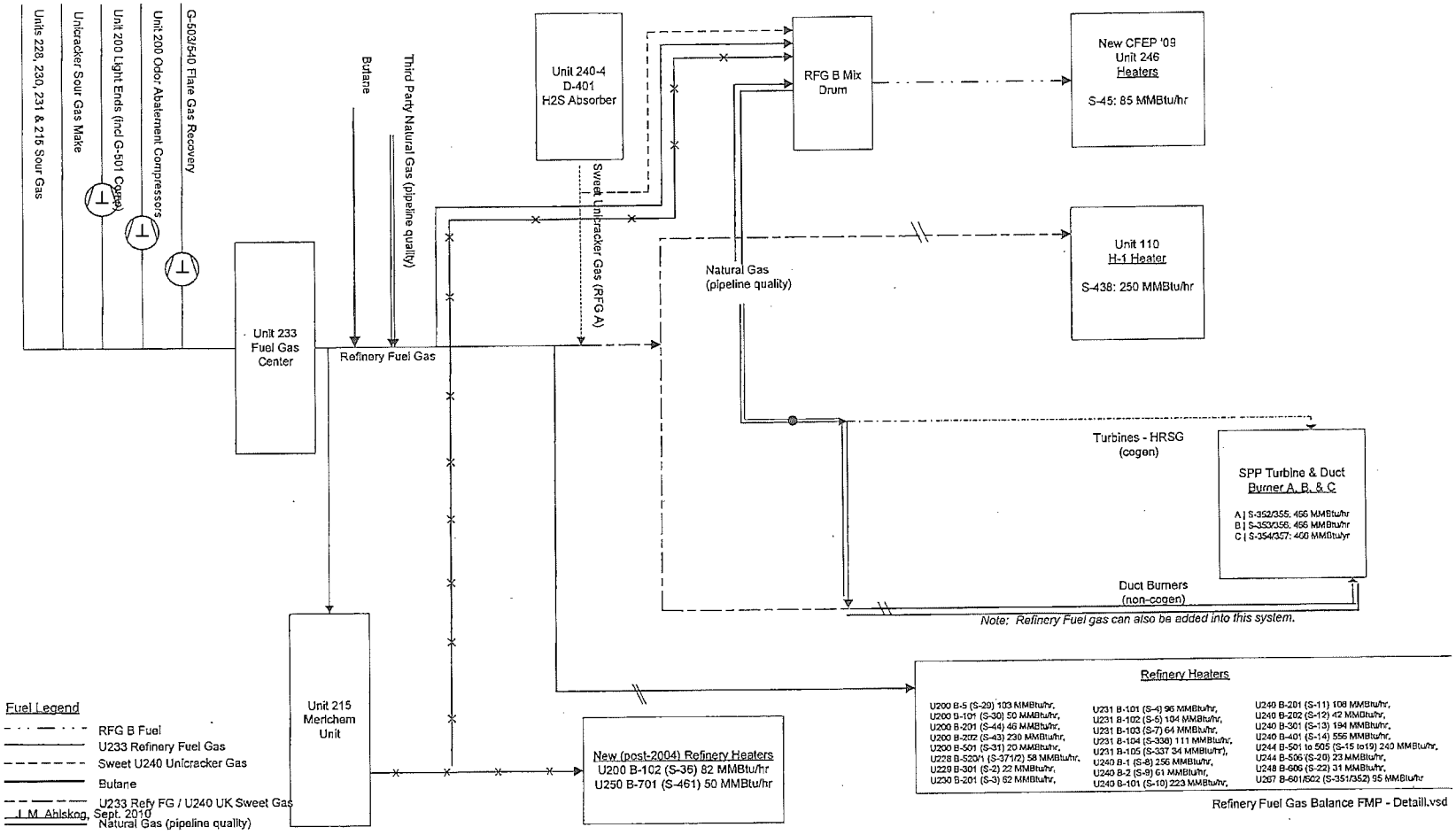

Attachment N

Cost Effectiveness Calculation Background Material

Cost Curves for Major Equipment

Flare Gas Storage Options

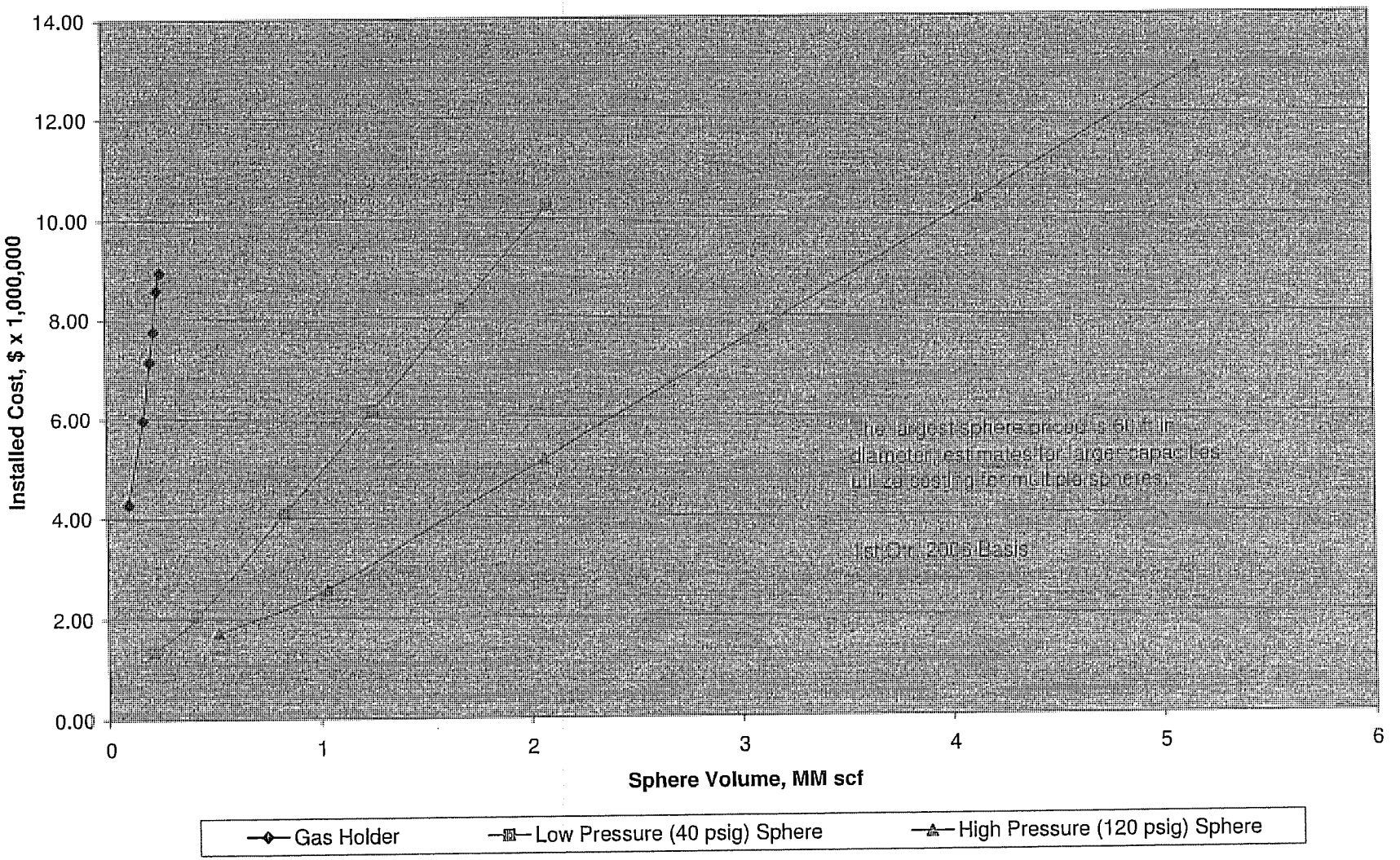

Confidential Attorney-Client Priviliged Work Document

Flare Gas Compressor System Costs

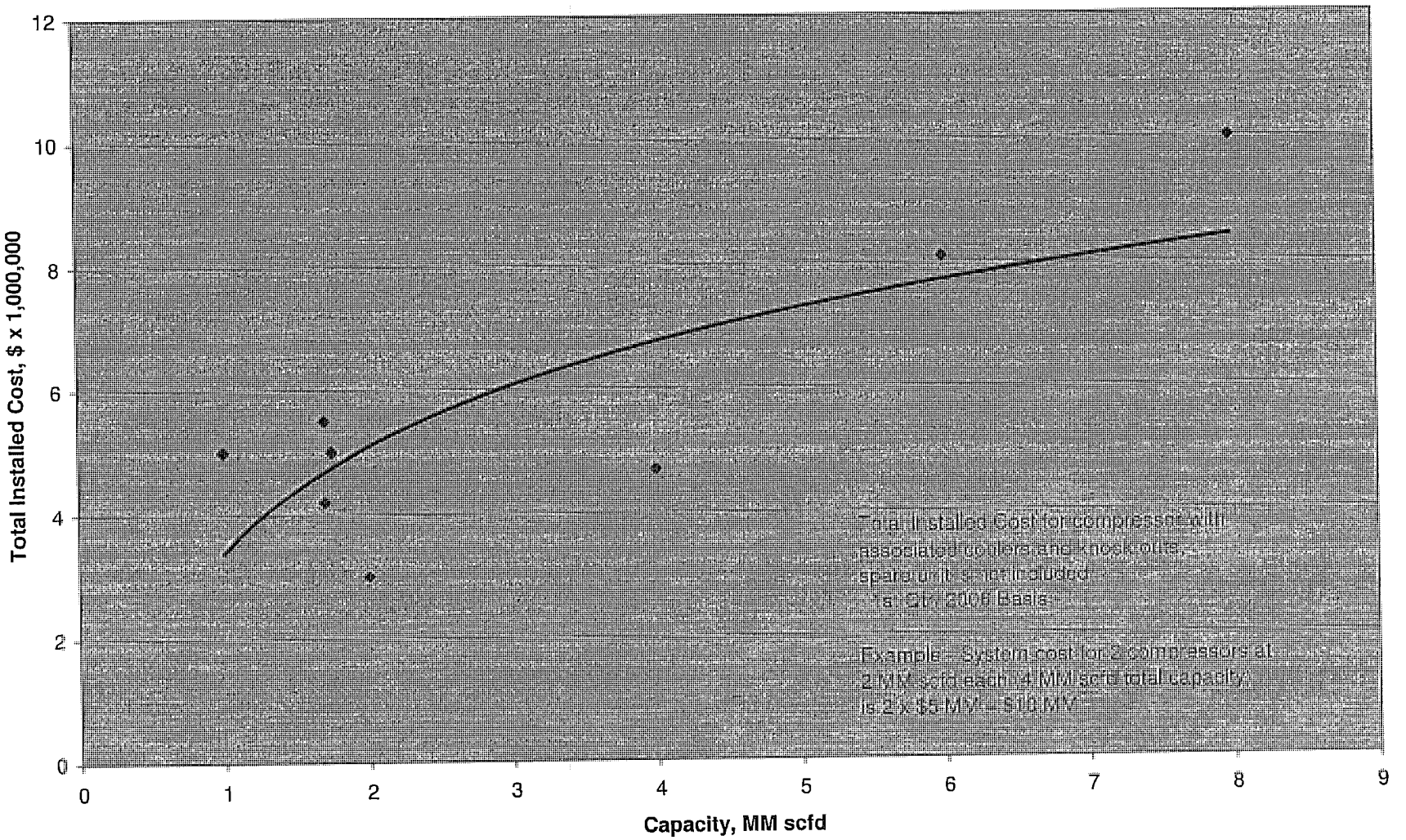

Confidential Attorney-Client Privileged Document

Fuel Gas Amine Treater Costs

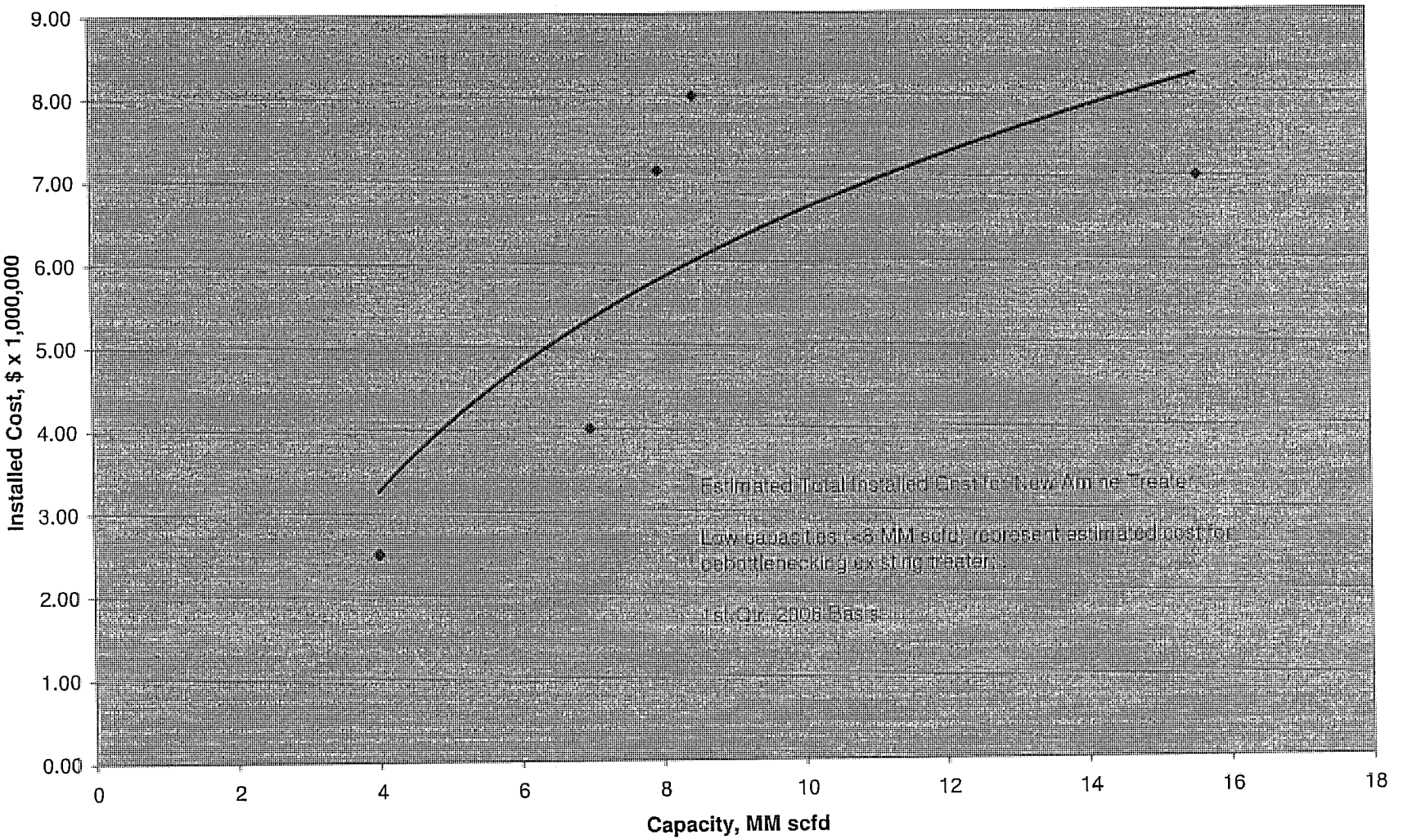

Confidential Attorney-Client Privileged Document

ENSR | AECOM

ENSR
2 Technology Park Drive, Westford, Massachusetts, 01886-3140
T 978.589.3000 F 978.589.3100 www.ensr.aecom.com

Telephone Call Summary

By:	Tom Sudol	Date:	5/11/06
Talked with:	Ken Petro	Project number:	07230-018
From (company):	Chicago Bridge & Iron	Project name:	Flare Minimization Plan
Phone number:	302-325-8407	Subject:	Spherical Storage Tank Costs

Distribution:

Message

Ken Petro called to respond to my budgetary price quote request.

A 60-ft diameter sphere operating at 40 psig would cost $1,550,000. Another $60,000 can be added for painting, and another $200,000 can be added for the foundation (foundation was estimated based on the general locations of the refineries, and the earthquake zone that they are located in). This tank would be a Div. I tank. The total installed cost of this tank is $1,810,000.

A 60-ft diameter sphere operating at 120 psig would cost $2,100,000. The painting and foundation costs would remain the same, bringing the total installed cost of the tank to $2,360,000. This tank would be a Div. II tank.

All prices quoted over the phone are +/- 25%.

To stress relieve (heat treat) the spheres, costs would increase as follows:

40 psi sphere, 60 ft diameter
$1,790,000 installed cost (up from $1,550,000), not including:
$200,000 foundation (unchanged)
$60,000 painting (unchanged)

60 psi sphere, 60 ft diameter
$2,325,000 installed cost (up from $2,100,000), not including:
$200,000 foundation (unchanged)
$60,000 painting (unchanged)

Signature

Cost Effective & Emission Calculations for

Storage, Treatment, and Recovery Cases 1 – 4

Storage, Treatment, & Recovery Scenario - Emission Reduction & Cost Effective Analysis

Case	Estimated Potential Reductions (tons/yr)					Cost Effective Basis (tons)	Cost of Control ($)	Annualized Cost of Abatement System ($)	Cost Effectiveness Basis ($/ton)
	VOC	SO2	Nox	CO	PM				
1	-0.15	-0.62	-0.02	-0.19	*0.00*	-0.98	$ 3,250,000	$ 1,061,000	$ (1,084,092)
2	-1.12	-4.51	-0.13	-1.38	*-0.01*	-7.16	$ 7,500,000	$ 2,508,000	$ (350,420)
3	-1.57	-6.35	-0.19	-1.94	*-0.02*	-10.07	$ 23,400,000	$ 6,195,000	$ (615,476)
4	-2.02	-8.18	-0.24	-2.51	*-0.02*	-12.97	$ 23,400,000	$ 6,195,000	$ (477,509)

Cost/Benefit Analysis for Flare Minimization

Case: Installation of Small Compressor to Capture Brief Peak Loads
1.5 MMSCFD Compressor - Eliminate Brief Peak Loading (100% of 2005)
Basis is BAAQMD Guidelines for calculation of cost-effectiveness for BACT using the "levelized cash flow method"

Cost Effectiveness = (Annualized Cost of Abatement System ($/yr)) /
(Reduction in Annual Pollutant Emissions (ton/yr))

Reduction in Annual Pollutant Emissions =
Baseline Uncontrolled Emissions
- Control Option Emissions

Reduction in Annual Pollutant Emissions =
1,954 lb/yr emissions of POG, NOx, CO, & SO2
0.98 tons/yr

Total Capital Cost $3,250,000

CRF = Capital Recovery Factor (to annualize capital cost)
CRF = $[i (1 + i)^n]/ [(1 + i)^n - 1]$
i = interest rate, at 0.06
n = lifetime of abatement system, at 10 yrs
CRF = 0.1359

Utilities
Power
400 bhp for flare gas compressor
0.85 efficiency at design
351.1 kw
0.10 $/kw
8,760 operating hours per year
$307,528 /yr

Annual Costs =
Direct Costs + Indirect Costs

Direct Costs		$/year
Labor	2 % of capital cost	65,000
Raw Materials		0
Replacement Parts at	2 % of capital cost	65,000
Utilities (power)		307,528
Total		$437,528

Indirect Costs		$/year
Overhead at	80 % of Labor costs	52,000
Property Tax at	1 % of Total Capital Cost	32,500
Insurance at	1 % of Total Capital Cost	32,500
General and Admin. at	2 % of Total Capital Cost	65,000
Capital Recovery at CRF x Total Capital Cost		441,571
Total		$623,571

Annualized Cost of Abatement System = $1,061,000

Cost Effectiveness = $1,086,000 per ton

Case No.	1
Case Title	Add Small 1.5 MMSCFD Compressor
Benefits Description	All small peak loading events (Alt H - G503 Capacity Exceedance) to be eliminated. Emission basis is 2005 actual event. Rather than vent gas being routed to the flare, it will be captured and utilized as fuel.

	Flow (MMSCF/yr)	POC (TPY)	SO2 (TPY)	Nox (TPY)	CO (TPY)	PM (TPY)
Baseline: Total Flow to Flare	58.46	9.59	39.75	2.19	11.90	0.32
Flow Captured, Routed to Htr	(0.946)	0.003	0.026	0.017	0.003	0.004
Remaining Flow to Flare	57.516	9.433	39.111	2.151	11.705	0.316
Total Emissions - Post Control		9.44	39.14	2.17	11.71	0.32
Emission Reduction	(0.98)	(0.15)	(0.62)	(0.02)	(0.19)	(0.00)

Total Pollutants

	2005 Baseline Flaring	Proposed Flow to Control		Emission Evaluation Baseline - Rerouted Flow	Controlled at Heater Emissions	Total Emissions	Emission Reduction
Control Method	**Flare - Actual**			**Flare**	**Heater**		
Total Volume to Flare (MMSCF/d)	0.25	0.003	0.074	0.158	0.003		
Total Volume to Flare (MMSCF/y)	58.462	0.946		57.516	0.946		
lb non-methane hydrocarbon (POC) to flare/scf flared gas [1]	0.0164	0.0164		0.0164	0.0164		
lb/yr non-methane hydrocarbon (POC) to flare	958,777	15,514		943,262	15,514		
Emissions from the Flare							
% Destruction of hydrocarbon in flare	98			98			
lb non-methane hydrocarbon (POC) emitted / scf flare gas	0.00033			0.00033			
lb sulfur dioxide (SO2) emission / scf flare gas	0.00136			0.00136			
POC: lb/yr non-methane hydrocarbon emissions from flare	19,176			18,865			
POC: ton/yr non-methane hydrocarbon emissions from flare	9.59			9.43			
SO2: lb/yr sulfur dioxide hydrocarbon emissions from flare	79,508			78,222			
SO2: ton/yr sulfur dioxide hydrocarbon emissions from flare	39.75			39.11			
NOX: Nox Emission Factor	0.068 lb/MMBtu						
Flare Gase Heating Value	1,100 Btu/scf						
lb/yr Nox Emissions from Flare	4,373			4,302			
tons/yr Nox from Flare	2.19			2.15			
CO Emission Factor	0.370 lb/MMBtu						
Flare Gase Heating Value	1,100 Btu/scf						
lb/yr CO Emissions from Flare	23,794			23,409			
tons/yr CO from Flare	11.90			11.70			
PM Emission Factor	0.01 lb/MMBtu per BAAQMD email 2/27/07						
lb/yr PM Emissions from Flare	643			633			
tons/yr PM from Flare	0.32			0.32			

Emiss(lbs) from Heater					
% Destruction of hydrocarbon in heater	n/a	99.50%	n/a	99.50%	
lb non-methane hydrocarbon (POC) emitted heater / scf flare gas	n/a	0.0000055	n/a	0.0000055	
Total sulfur (TS) (ppmv) content of scrubbed fuel gas		325		325	
POC: lb/yr non-methane hydrocarbon emissions from heater	n/a	5	n/a	5	
POC: ton/yr non-methane hydrocarbon emissions from heater	n/a	0.00	n/a	0.00	
SO2: lb/yr sulfur dioxide emissions from heater		51.92		51.92	
SO2: ton/yr sulfur dioxide emissions from heater		0.03		0.03	
NOX: Nox Emission Factor				0.033	lb/MMBtu
Flare Gase Heating Value				1,100	Btu/scf
lb/yr Nox Emissions from Flare				34	lb/yr
tons/yr Nox from Flare				0.02	tpy
CO Emission Factor				100	ppmv
lb/yr CO Emissions from Flare				6.99	lb/yr
tons/yr CO from Flare				0.0035	tpy
PM Emission Factor				7.60	lb/MMScf, AP-42
lb/yr PM Emissions from Flare				7.19	lb/yr
tons/yr PM from Flare				0.0036	tpy

Emissions to the Atmosphere					Total	
POC: lb/yr	19,176		18,865	5	18,870	-305.08
POC: tpy	9.59		9.43	0	9.4	-0.15
SO2: lb/yr	79,508		78,222	52	78,274	-1,234.64
SO2: tpy	39.75		39.11	0	39.1	-0.62
NOX: lb/yr	4,373		4,302	34	4,337	-36.42
NOX: tpy	2.19		2.15	0.02	2.17	-0.02
CO: lb/yr	23,794		23,409	7	23,416	-378.03
CO: tpy	11.90		11.70	0.003	11.71	-0.19
PM: lb/yr	643.08		632.68	7.19	640	-3.22
PM: tpy	0.32		0.32	0.0036	0.320	0.00

[1] POC & SO2 levels based on historical sampling data.

Cost/Benefit Analysis for Flare Minimization

Case: Installation of Larger Compressor to Capture Brief Peak Loads & G-503 Maintenance
6.0 MMSCFD Compressor - Eliminate Brief Peak Loading & G-503 PM (100% of 2005)

Basis is BAAQMD Guidelines for calculation of cost-effectiveness for BACT using the "levelized cash flow method"

Reduction in Annual Pollutant Emissions =
-11,475 lb/yr emissions of POG, NOx, CO, & SO2
-5.74 tons/yr

Total Capital Cost			$7,500,000
CRF = Capital Recovery Factor (to annualize capital cost)			
CRF = $[i (1 + i)^n]/ [(1 + i)^n - 1]$			
i = interest rate, at	0.06		
n = lifetime of abatement system, at		10 yrs	
CRF =	0.1359		

Utilities

Power	1,000	bhp for flare gas compressor
	0.85	efficiency at design
	877.6	kw
	0.10	$/kw
	8,760	operating hours per year
	$768,819	/yr

Annual Costs =
Direct Costs + Indirect Costs

Direct Costs		$/year
Labor	2 % of capital cost	150,000
Raw Materials		0
Replacement Parts at	2 % of capital cost	150,000
Utilities (power)		768,819
Total		$1,068,819

Indirect Costs		$/year
Overhead at	80 % of Labor costs	120,000
Property Tax at	1 % of Total Capital Cost	75,000
Insurance at	1 % of Total Capital Cost	75,000
General and Admin. at	2 % of Total Capital Cost	150,000
Capital Recovery at CRF x Total Capital Cost		1,019,010
Total		$1,439,010

Annualized Cost of Abatement System = $2,508,000

Cost Effectiveness =	-$437,000 per ton

Case No.	2					
Case Title	Add larger 6 MMSCF/D compressor					
Benefits Description	Eliminate Brief Peak Loading (G-503 Capacity Exceedance) & G-503 PM (100% of 2005). Emission basis is 2005 actual event. Rather than vent gas being routed to the flare, it will be captured and utilized as fuel.					
	Flow (MMSCF/yr)	POC (TPY)	SO2 (TPY)	Nox (TPY)	CO (TPY)	PM (TPY)
Baseline: Total Flow to Flare	58.46	9.59	39.75	2.19	11.90	0.32
Flow Captured, Routed to Htr	(6.918)	0.019	0.190	0.126	0.026	0.026
Remaining Flow to Flare	51.544	8.453	35.050	1.928	10.489	0.283
Total Emissions - Post Control		8.47	35.24	2.05	10.51	0.31
Emission Reduction	(7.15)	(1.12)	(4.51)	(0.13)	(1.38)	(0.01)

Total Pollutants

	2005 Baseline Flaring	Proposed Flow to Control	Emission Evaluation Baseline - Rerouted Flow	Controlled at Heater Emissions	Total Emissions	Emission Reduction
Control Method	**Flare - Actual**		**Flare**	**Heater**		
Total Volume to Flare (MMSCF/d)	0.25	0.019	0.141	0.019		
Total Volume to Flare (MMSCF/y)	58.462	6.918	51.544	6.918		
lb non-methane hydrocarbon (POC) to flare/scf flared gas [1]	0.0164	0.0164	0.0164	0.0164		
lb/yr non-methane hydrocarbon (POC) to flare	958,777	113,455	845,322	113,455		
Emissions from the Flare						
% Destruction of hydrocarbon in flare	98		98			
lb non-methane hydrocarbon (POC) emitted / scf flare gas	0.00033		0.00033			
lb sulfur dioxide (SO2) emission / scf flare gas	0.00136		0.00136			
POC: lb/yr non-methane hydrocarbon emissions from flare	19,176		16,906			
POC: ton/yr non-methane hydrocarbon emissions from flare	9.59		8.45			
SO2: lb/yr sulfur dioxide hydrocarbon emissions from flare	79,508		70,100			
SO2: ton/yr sulfur dioxide hydrocarbon emissions from flare	39.75		35.05			
NOX: Nox Emission Factor	0.068 lb/MMBtu					
Flare Gase Heating Value	1,100 Btu/scf					
lb/yr Nox Emissions from Flare	4,373		3,855			
tons/yr Nox from Flare	2.19		1.93			
CO Emission Factor	0.370 lb/MMBtu					
Flare Gase Heating Value	1,100 Btu/scf					
lb/yr CO Emissions from Flare	23,794		20,978			
tons/yr CO from Flare	11.90		10.49			
PM Emission Factor	0.01 lb/MMBtu per BAAQMD email 2/27/07					
lb/yr PM Emissions from Flare	643		567			
tons/yr PM from Flare	0.32		0.28			

Emissions from Heater					
% Destruction of hydrocarbon in heater	n/a	99.50%	n/a	99.50%	
lb non-methane hydrocarbon (POC) emitted heater / scf flare gas	n/a	0.0000055	n/a	0.0000055	
Total sulfur (TS) (ppmv) content of scrubbed fuel gas		325		325	
POC: lb/yr non-methane hydrocarbon emissions from heater	n/a	38	n/a	38	
POC: ton/yr non-methane hydrocarbon emissions from heater	n/a	0.02	n/a	0.02	
SO2: lb/yr sulfur dioxide emissions from heater		379.67		379.67	
SO2: ton/yr sulfur dioxide emissions from heater		0.19		0.19	
NOX: Nox Emission Factor				0.033	lb/MMBtu
Flare Gase Heating Value				1,100	Btu/scf
lb/yr Nox Emissions from Flare				251	lb/yr
tons/yr Nox from Flare				0.13	tpy
CO Emission Factor				100	ppmv
lb/yr CO Emissions from Flare				51.11	lb/yr
tons/yr CO from Flare				0.0256	tpy
PM Emission Factor				7.60	lb/MMScf, AP-42
lb/yr PM Emissions from Flare				52.58	lb/yr
tons/yr PM from Flare				0.0263	tpy

Emissions to the Atmosphere					Total	
POC: lb/yr	19,176	16,906	38		16,944	-2,231.06
POC: tpy	9.59	8.45	0		8.5	-1.12
SO2: lb/yr	79,508	70,100	380		70,480	-9,028.81
SO2: tpy	39.75	35.05	0		35.2	-4.51
NOX: lb/yr	4,373	3,855	251		4,107	-266.34
NOX: tpy	2.19	1.93	0.13		2.05	-0.13
CO: lb/yr	23,794	20,978	51		21,030	-2,764.52
CO: tpy	11.90	10.49	0.026		10.51	-1.38
PM: lb/yr	643.08	566.98	52.58		620	-23.52
PM: tpy	0.32	0.28	0.0263		0.310	-0.01

Cost/Benefit Analysis for Flare Minimization

Case: Installation of Larger Compressor to Capture Brief Peak Loads & G-503 Maintenance
Range 1 - Conservative Estimate of Gasses to be Recovered

Basis is BAAQMD Guidelines for calculation of cost-effectiveness for BACT using the "levelized cash flow method"

Cost Effectiveness = (Annualized Cost of Abatement System ($/yr)) /
(Reduction in Annual Pollutant Emissions (ton/yr))

Reduction in Annual Pollutant Emissions =
-20,098 lb/yr non-methane hydrocarbon emissions (POC) & SO2
-10.05 tons/yr

Total Capital Cost			$23,400,000
CRF = Capital Recovery Factor (to annualize capital cost)			
CRF = $[i (1 + i)^n]/ [(1 + i)^n - 1]$			
i = interest rate, at	0.06		
n = lifetime of abatement system, at		10 yrs	
CRF =	0.1359		

Utilities

Power	1,000	bhp for flare gas compressor
	0.85	efficiency at design
	877.6	kw
	0.10	$/kw
	8,760	operating hours per year
	$768,819	/yr

Annual Costs =
Direct Costs + Indirect Costs

Direct Costs		$/year
Labor	2 % of capital cost	468,000
Raw Materials		0
Replacement Parts at	2 % of capital cost	468,000
Utilities (power)		768,819
Total		$1,704,819

Indirect Costs		$/year
Overhead at	80 % of Labor costs	374,400
Property Tax at	1 % of Total Capital Cost	234,000
Insurance at	1 % of Total Capital Cost	234,000
General and Admin. at	2 % of Total Capital Cost	468,000
Capital Recovery at CRF x Total Capital Cost		3,179,310
Total		$4,489,710

Annualized Cost of Abatement System = $6,195,000

Cost Effectiveness =	-$616,000 per ton

Case No.	3					
Case Title	Add compressor and storage vessel					
Benefits Description	Eliminate Brief Peak Loading (C-503 Capacity Exceedance); C-503 PM (100% of 2005); portion of maintenance & some emergency events to be eliminated (5 - 10%). Emission basis is 2005 actual event. Rather than vent gas being routed to the flare, it will be captured and utilized as fuel.					
	Flow (MMSCF/yr)	POC (TPY)	SO2 (TPY)	Nox (TPY)	CO (TPY)	PM (TPY)
Baseline: Total Flow to Flare	58.46	9.59	39.75	2.19	11.90	0.32
Flow Captured, Routed to Htr	(9.729)	0.027	0.267	0.177	0.036	0.037
Remaining Flow to Flare	48.733	7.992	33.138	1.823	9.917	0.268
Total Emissions - Post Control		8.02	33.41	2.00	9.95	0.31
Emission Reduction	(10.05)	(1.57)	(6.35)	(0.19)	(1.94)	(0.02)

Total Pollutants

	2005 Baseline Flaring		Proposed Flow to Control		Emission Evaluation Baseline - Rerouted Flow	Controlled at Heater Emissions	Total Emissions	Emission Reduction
Control Method	Flare: Actual				Flare	Heater		
Total Volume to Flare (MMSCF/d)	0.25		0.027	0.074	0.134	0.027		
Total Volume to Flare (MMSCF/y)	58.462		9.73		48.733	9.729		
lb non-methane hydrocarbon (POC) to flare/scf flared gas [1]	0.0164		0.0164		0.0164	0.0164		
lb/yr non-methane hydrocarbon (POC) to flare	958,777		159,557		799,220	159,557		
Emissions from the Flare								
% Destruction of hydrocarbon in flare	98				98			
lb non-methane hydrocarbon (POC) emitted / scf flare gas	0.00033				0.00033			
lb sulfur dioxide (SO2) emission / scf flare gas	0.00136				0.00136			
POC: lb/yr non-methane hydrocarbon emissions from flare	19,176				15,984			
POC: ton/yr non-methane hydrocarbon emissions from flare	9.59				7.99			
SO2: lb/yr sulfur dioxide hydrocarbon emissions from flare	79,508				66,277			
SO2: ton/yr sulfur dioxide hydrocarbon emissions from flare	39.75				33.14			
NOX: Nox Emission Factor	0.068	lb/MMBtu						
Flare Gase Heating Value	1,100	Btu/scf						
lb/yr Nox Emissions from Flare	4,373				3,645			
tons/yr Nox from Flare	2.19				1.82			
CO Emission Factor	0.370	lb/MMBtu						
Flare Gase Heating Value	1,100	Btu/scf						
lb/yr CO Emissions from Flare	23,794				19,834			
tons/yr CO from Flare	11.90				9.92			
PM Emission Factor	0.01	lb/MMBtu per BAAQMD email 2/27/07						
lb/yr PM Emissions from Flare	643				536			
tons/yr PM from Flare	0.32				0.27			

Emissions from Heater					
% Destruction of hydrocarbon in heater	n/a	99.50%	n/a	99.50%	
lb non-methane hydrocarbon (POC) emitted heater / scf flare gas	n/a	0.0000055	n/a	0.0000055	
Total sulfur (TS) (ppmv) content of scrubbed fuel gas		325		325	
POC: lb/yr non-methane hydrocarbon emissions from heater	n/a	54	n/a	54	
POC: ton/yr non-methane hydrocarbon emissions from heater	n/a	0.03	n/a	0.03	
SO2: lb/yr sulfur dioxide emissions from heater		533.94		533.94	
SO2: ton/yr sulfur dioxide emissions from heater		0.27		0.27	
NOX: Nox Emission Factor				0.033	lb/MMBtu
Flare Gase Heating Value				1,100	Btu/scf
lb/yr Nox Emissions from Flare				353	lb/yr
tons/yr Nox from Flare				0.18	tpy
CO Emission Factor				100	ppmv
lb/yr CO Emissions from Flare				71.88	lb/yr
tons/yr CO from Flare				0.0359	tpy
PM Emission Factor				7.60	lb/MMScf, AP-42
lb/yr PM Emissions from Flare				73.94	lb/yr
tons/yr PM from Flare				0.0370	tpy

Emissions to the Atmosphere					Total	
POC: lb/yr	19,176	15,984	54	16,038	-3,137.63
POC: tpy	9.59	7.99	0	8.0	-1.57
SO2: lb/yr	79,508	66,277	534	66,811	-12,697.62
SO2: tpy	39.75	33.14	0	33.4	-6.35
NOX: lb/yr	4,373	3,645	353	3,998	-374.57
NOX: tpy	2.19	1.82	0.18	2.00	-0.19
CO: lb/yr	23,794	19,834	72	19,906	-3,887.86
CO: tpy	11.90	9.92	0.036	9.95	-1.94
PM: lb/yr	643.08	536.06	73.94	610	-33.08
PM: tpy	0.32	0.27	0.0370	0.305	-0.02

Cost/Benefit Analysis for Flare Minimization

Case: Installation of High Pressure Spheres, Compressor, & Amine Treatment
Range 2 - More Aggressive Estimate of Gasses to be Recovered

Basis is BAAQMD Guidelines for calculation of cost-effectiveness for BACT using the "levelized cash flow method"

Cost Effectiveness = (Annualized Cost of Abatement System ($/yr)) /
(Reduction in Annual Pollutant Emissions (ton/yr))

Reduction in Annual Pollutant Emissions =
Baseline Uncontrolled Emissions
- Control Option Emissions

Reduction in Annual Pollutant Emissions =
-25,905 lb/yr non-methane hydrocarbon emissions (POC) & SO2
-12.95 tons/yr

Total Capital Cost			$23,400,000
CRF = Capital Recovery Factor (to annualize capital cost)			
CRF = $[i (1 + i)^n]/ [(1 + i)^n - 1]$			
i = interest rate, at	0.06		
n = lifetime of abatement system, at		10 yrs	
CRF =	0.1359		

Utilities

Power	1,000	bhp for flare gas compressor
	0.85	efficiency at design
	877.6	kw
	0.10	$/kw
	8,760	operating hours per year
	$768,819	/yr

Annual Costs =
Direct Costs + Indirect Costs

Direct Costs		$/year
Labor	2 % of capital cost	468,000
Raw Materials		0
Replacement Parts at	2 % of capital cost	468,000
Utilities (power)		768,819
Total		$1,704,819

Indirect Costs		$/year
Overhead at	80 % of Labor costs	374,400
Property Tax at	1 % of Total Capital Cost	234,000
Insurance at	1 % of Total Capital Cost	234,000
General and Admin. at	2 % of Total Capital Cost	468,000
Capital Recovery at CRF x Total Capital Cost		3,179,310
Total		$4,489,710

Annualized Cost of Abatement System = $6,195,000

Cost Effectiveness =	-$478,000 per ton

Case No.	4					
Case Title	Add compressor and storage vessel					
Benefits Description	Eliminate Brief Peak Loading (C-503 Capacity Exceedance); C-503 PM (100% of 2005), portion of maintenance & some emergency events to be eliminated (10 - 30%). Emission basis is 2005 actual event. Rather than vent gas being routed to the flare it					
	Flow (MMSCF/yr)	POC (tPY)	SO2 (tPY)	NOx (tPY)	CO (tPY)	PM (tPY)
Baseline: Total Flow to Flare	58.46	9.59	39.75	2.19	11.90	0.32
Flow Captured, Routed to Htr	(12.540)	0.034	0.344	0.228	0.046	0.048
Remaining Flow to Flare	45.922	7.531	31.227	1.717	9.345	0.253
Total Emissions - Post Control		7.57	31.57	1.95	9.39	0.30
Emission Reduction	(12.95)	(2.02)	(8.18)	(0.24)	(2.51)	(0.02)

Total Pollutants

	2005 Baseline Flaring	Proposed Flow to Control		Emission Evaluation Baseline - Rerouted Flow	Controlled at Heater Emissions	Total Emissions	Emission Reduction
Control Method	**Flare - Actual**			**Flare**	**Heater**		
Total Volume to Flare (MMSCF/d)	0.25	0.034	0.074	0.126	0.034		
Total Volume to Flare (MMSCF/y)	58.462	12.54		45.922	12.540		
lb non-methane hydrocarbon (POC) to flare/scf flared gas [1]	0.0164	0.0164		0.0164	0.0164		
lb/yr non-methane hydrocarbon (POC) to flare	958,777	205,658		753,119	205,658		
Emissions from the Flare							
% Destruction of hydrocarbon in flare	98			98			
lb non-methane hydrocarbon (POC) emitted / scf flare gas	0.00033			0.00033			
lb sulfur dioxide (SO2) emission / scf flare gas	0.00136			0.00136			
POC: lb/yr non-methane hydrocarbon emissions from flare	19,176			15,062			
POC: ton/yr non-methane hydrocarbon emissions from flare	9.59			7.53			
SO2: lb/yr sulfur dioxide hydrocarbon emissions from flare	79,508			62,454			
SO2: ton/yr sulfur dioxide hydrocarbon emissions from flare	39.75			31.23			
NOX: Nox Emission Factor	0.068 lb/MMBtu						
Flare Gase Heating Value	1,100 Btu/scf						
lb/yr Nox Emissions from Flare	4,373			3,435			
tons/yr Nox from Flare	2.19			1.72			
CO Emission Factor	0.370 lb/MMBtu						
Flare Gase Heating Value	1,100 Btu/scf						
lb/yr CO Emissions from Flare	23,794			18,690			
tons/yr CO from Flare	11.90			9.35			
PM Emission Factor	0.01 lb/MMBtu per BAAQMD email 2/27/07						
lb/yr PM Emissions from Flare	643			505			
tons/yr PM from Flare	0.32			0.25			

Emissions from Heater					
% Destruction of hydrocarbon in heater	n/a	99.50%	n/a	99.50%	
lb non-methane hydrocarbon (POC) emitted heater / scf flare gas	n/a	0.0000055	n/a	0.0000055	
Total sulfur (TS) (ppmv) content of scrubbed fuel gas		325		325	
POC: lb/yr non-methane hydrocarbon emissions from heater	n/a	69	n/a	69	
POC: ton/yr non-methane hydrocarbon emissions from heater	n/a	0.03	n/a	0.03	
SO2: lb/yr sulfur dioxide emissions from heater		688.22		688.22	
SO2: ton/yr sulfur dioxide emissions from heater		0.34		0.34	
NOX: Nox Emission Factor				0.033	lb/MMBtu
Flare Gase Heating Value				1,100	Btu/scf
lb/yr Nox Emissions from Flare				455	lb/yr
tons/yr Nox from Flare				0.23	tpy
CO Emission Factor				100	ppmv
lb/yr CO Emissions from Flare				92.64	lb/yr
tons/yr CO from Flare				0.0463	tpy
PM Emission Factor				7.60	lb/MMScf, AP-42
lb/yr PM Emissions from Flare				95.30	lb/yr
tons/yr PM from Flare				0.0477	tpy

Emissions to the Atmosphere					Total
POC: lb/yr	19,176	15,062	69	15,131	-4,044.19
POC: tpy	9.59	7.53	0	7.6	-2.02
SO2: lb/yr	79,508	62,454	688	63,142	-16,366.35
SO2: tpy	39.75	31.23	0	31.6	-8.18
NOX: lb/yr	4,373	3,435	455	3,890	-482.79
NOX: tpy	2.19	1.72	0.23	1.95	-0.24
CO: lb/yr	23,794	18,690	93	18,783	-5,011.19
CO: tpy	11.90	9.35	0.046	9.39	-2.51
PM: lb/yr	643.08	505.14	95.30	600	-42.64
PM: tpy	0.32	0.25	0.0477	0.300	-0.02

Attachment O

Document Revision Log

Revision No.	Revision Date	Revision Author (Name, Company)	Reason for Revision	Requires Re-Submission to USEPA? (Re:Section 1.5)
0		J. Ahlskog	Initial FMP per BAAQMD 12-12 (ESDR-319-06)	n/a
0-3	Various Years (Annually)	Various Authors See past submittals	Annual FMP updates to BAAQMD	n/a
4	7/16/18	J. Ahlskog	Annual FMP update and installation of new Liquid Ring Flare Gas Recovery Compressor (ESDR-313-08)	n/a
5-16	Various Years (Annually)	Various Authors (See past submittals)	Annual FMP updates to BAAQMD	n/a
16	10/1/18	J. Ahlskog	Annual FMP update to BAAQMD (ESDR-273-18)	n/a
17	1/29/19	J. Ahlskog	Incorporation of EPA RSR requirements and corresponding compliance items across various sections of the FMP for all applicable flares. (ESDR-40-19)	Yes
18	10/1/19	J. Ahlskog	Annual FMP update to BAAQMD	n/a